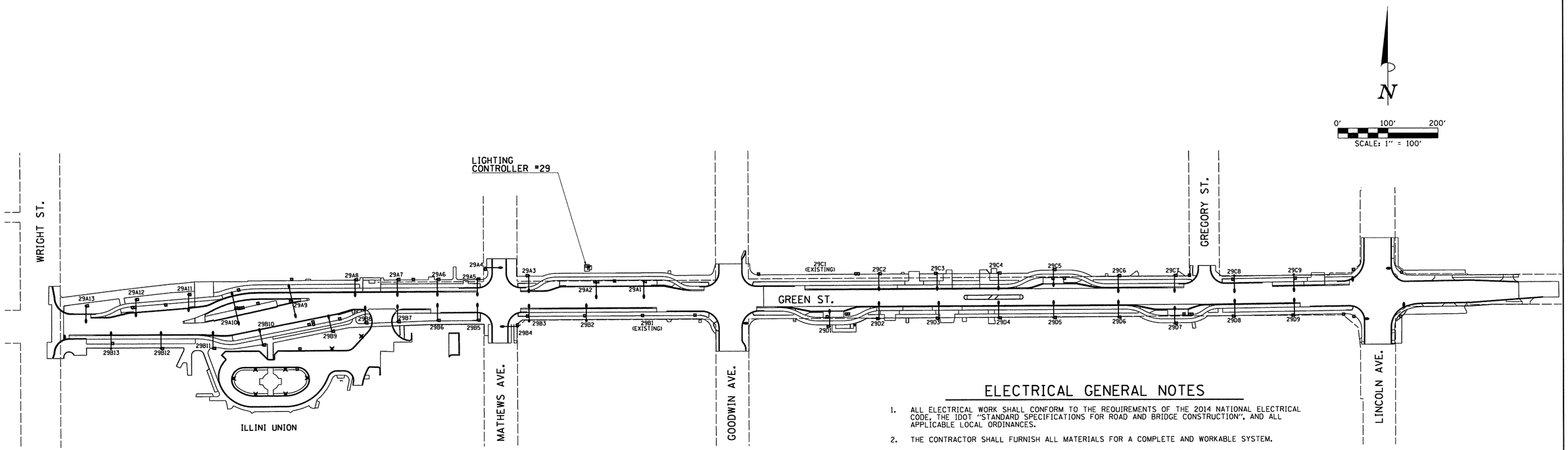

BILL OF MATERIALS

CODE NUMBER	ITEM	UNIT	TOTAL QUANTITY
81028350	UNDERGROUND CONDUIT, PVC, 2" DIA.	FOOT	10038
81028400	UNDERGROUND CONDUIT, PVC, 5" DIA.	FOOT	9
81400700	HANDHOLE, PORTLAND CEMENT CONCRETE	EACH	1
81500120	GULFBOX JUNCTION, COMPOSITE CONCRETE	EACH	1
81702110	ELECTRIC CABLE IN CONDUIT, 600V (XLP-TYPE USE) 1/C NO. 10	FOOT	155
81702120	ELECTRIC CABLE IN CONDUIT, 600V (XLP-TYPE USE) 1/C NO. 8	FOOT	3786
81702130	ELECTRIC CABLE IN CONDUIT, 600V (XLP-TYPE USE) 1/C NO. 6	FOOT	1861
81702140	ELECTRIC CABLE IN CONDUIT, 600V (XLP-TYPE USE) 1/C NO. 4	FOOT	20208
81702155	ELECTRIC CABLE IN CONDUIT, 600V (XLP-TYPE USE) 1/C NO. 1	FOOT	2070
83000400	LIGHT POLE, ALUMINUM, 30 FT. M.H., 10 FT. DAVIT ARM	EACH	39
83600200	LIGHT POLE FOUNDATION, 24" DIAMETER	FOOT	168
84200500	REMOVAL OF LIGHTING UNIT, SALVAGE	EACH	1
84200600	REMOVAL OF LIGHTING UNIT, NO SALVAGE	EACH	27
84200804	REMOVAL OF POLE FOUNDATION	EACH	30
84400105	RELOCATE EXISTING LIGHTING UNIT	EACH	5
84500110	REMOVAL OF LIGHTING CONTROLLER	EACH	1
84500120	REMOVAL OF ELECTRIC SERVICE INSTALLATION	EACH	1
X0327739	MISCELLANEOUS ELECTRICAL WORK	LSUM	1
X1400092	LIGHT POLE, ALUMINUM, 30 FT. M.H., 10 FT. DAVIT ARM - TWIN	EACH	2
X1700001	DRILL EXISTING MANHOLE, HEAVY DUTY HANDHOLE, OR MEDIAN WALL JUNCTION BOX	EACH	8
X6050040	REMOVING MANHOLES, SPECIAL	EACH	1
X8040102	ELECTRIC SERVICE INSTALLATION, SPECIAL	EACH	4
X8130110	JUNCTION BOX (SPECIAL)	EACH	78
X8130125	REMOVE EXISTING JUNCTION BOX	EACH	8
X8211125	LUMINARE, LED, HORIZONTAL MOUNT, SPECIAL	EACH	21
X8250505	LIGHTING CONTROLLER, SPECIAL	EACH	1
X8360120	LIGHT POLE FOUNDATION, SPECIAL	EACH	22
XX003303	CONCRETE LIGHT POLE	EACH	8
XX007797	LUMINAIRE (SPECIAL)	EACH	8
XX008068	LUMINAIRE INSTALLATION, TYPE 1	EACH	15
XX008069	LUMINAIRE INSTALLATION, TYPE 2	EACH	8
XX009128	FIBER OPTIC CABLE IN CONDUIT (SPECIAL)	FOOT	3187

ELECTRICAL GENERAL NOTES

1. ALL ELECTRICAL WORK SHALL CONFORM TO THE REQUIREMENTS OF THE 2014 NATIONAL ELECTRICAL CODE, THE IDOT "STANDARD SPECIFICATIONS FOR ROAD AND BRIDGE CONSTRUCTION", AND ALL APPLICABLE LOCAL ORDINANCES.
2. THE CONTRACTOR SHALL FURNISH ALL MATERIALS FOR A COMPLETE AND WORKABLE SYSTEM.
3. THE CONTRACTOR SHALL BE RESPONSIBLE FOR OBTAINING ALL REQUIRED PERMITS AND FOR PROVIDING ALL SUPERVISION, LABOR, MATERIAL AND TOOLS FOR THE PROJECT. CONTRACTOR SHALL OBTAIN CITY OF URBANA ELECTRICIAN LICENSE PRIOR TO START OF WORK. CONTRACTOR SHALL COORDINATE INSPECTION OF WORK WITH THE CITY OF URBANA.
4. ALL LOCATIONS AND DIMENSIONS SHOWN ARE APPROXIMATE. THE CONTRACTOR SHALL FIELD VERIFY ALL EQUIPMENT LOCATIONS AND EQUIPMENT DIMENSIONS.
5. ALL CONDUITS WITH WIRING SHALL BE PROVIDED WITH AN INSULATED COPPER GROUNDING CONDUCTOR SIZED AS NOTED ON PLANS AND IN ACCORDANCE WITH THE 2014 NATIONAL ELECTRICAL CODE.
6. ALL GROUNDING CONDUCTORS SHALL BE BONDED TOGETHER IN ALL HANDHOLES AND JUNCTION BOXES. (SEE DETAILS)
7. ALL SERVICE LATERAL CONDUITS SHALL BE SCHEDULE 40 PVC EXCEPT ALL ELBOWS AND VERTICAL RISERS SHALL BE RIGID GALVANIZED STEEL. ALL ELBOWS SHALL BE LONG RADIUS TYPE. CONTRACTOR SHALL VERIFY AND COMPLY WITH ALL UNIVERSITY OF ILLINOIS AND PRAIRIELAND ENERGY REQUIREMENTS FOR THE SERVICE INSTALLATIONS.
8. CONDUIT ROUTING SHOWN IS SCHEMATIC ONLY. CONTRACTOR SHALL COORDINATE EXACT ROUTING AND INSTALLATION WITH ALL OTHER SITE WORK BEING PERFORMED. COORDINATE ALL POLE LOCATIONS WITH ENGINEER IN THE FIELD.
9. PROVIDE PULLSTRING IN ALL CONDUITS, INCLUDING THOSE CONDUITS WITH CONDUCTORS INSTALLED. THE PULL STRING SHALL BE INCLUDED IN THE COST OF THE CONDUITS AND NO ADDITIONAL COMPENSATION WILL BE ALLOWED.
10. THE CONTRACTOR SHALL TAG ALL ELECTRICAL CONDUCTORS (PHASE CONDUCTORS, NEUTRALS, AND GROUNDS) WITH PERMANENT TAGS. EACH CONDUCTOR SHALL BE TAGGED IN ALL CONCRETE HANDHOLES, JUNCTION BOXES, AND POLE HANDHOLES. THE TAG SHALL INDICATE THE LIGHTING CONTROLLER AND CIRCUIT NUMBER FROM WHICH THE CONDUCTORS ORIGINATE.
11. ALL CONDUITS SHALL BE 30" BELOW FINAL GRADE UNLESS OTHERWISE DIRECTED BY THE ENGINEER. CONTRACTOR IS RESPONSIBLE FOR REPAIR TO ALL UNDERGROUND UTILITIES DAMAGED DURING INSTALLATION OF ROADWAY LIGHTING AND FEEDER SYSTEMS.
12. SERVICE GROUND RODS SHALL BE 3/4" DIAMETER x 10'-0" LONG COPPER CLAD STEEL. GROUND RODS AT POLES SHALL BE 5/8" DIAMETER X 10'-0" LONG. GROUNDING ELECTRODE CONDUCTORS SHALL BE #4 SOLID COPPER AND SHALL BE CONNECTED WITH HYDRAULIC CRIMP TYPE CONNECTIONS TO GROUNDING ELECTRODE. GROUND ROD SHALL BE INSTALLED AT LIGHTING CONTROLLER, HANDHOLES AND JUNCTION BOXES.
13. POLE WIRING WILL NOT BE PAID FOR SEPARATELY BUT SHALL BE INCLUDED WITH THE LUMINAIRE PER ARTICLE 821.03 OF THE STANDARD SPECIFICATIONS.
14. WHERE EXISTING CONDUCTORS ARE TO BE ABANDONED IN PLACE, THE CONDUCTORS SHALL BE DISCONNECTED AND ISOLATED FROM EXISTING CONDUCTORS WHICH ARE TO REMAIN ENERGIZED.
15. THE CONTRACTOR SHALL USE CARE IN CONSTRUCTING THE LIGHT POLES THAT ARE NEAR TRENCH EXCAVATIONS FOR STORM SEWERS AND OTHER UTILITIES. THE CONTROLLED LOW-STRENGTH MATERIAL SHALL BE BLOCKED OUT AT THE CONCRETE FOUNDATION LOCATIONS TO ALLOW FOR THEIR LATER CONSTRUCTION AS DIRECTED BY THE ENGINEER.
16. THE EXISTING LIGHTING UNITS (LUMINAIRES AND POLES) THAT ARE NOTED TO BE SALVAGED SHALL REMAIN THE PROPERTY OF THE CITY OF URBANA, AND SHALL BE MOVED TO AND STORED AT A LOCATION DESIGNATED BY THE ENGINEER FOR PICK UP BY THE CITY'S FORCES.
17. CONDUITS ARE INDICATED AS TRENCHED OR AUGERED FOR INFORMATION PURPOSES. ALL CONDUIT WILL BE PAID AT THE CONTRACT UNIT PRICE PER FOOT FOR UNDERGROUND CONDUIT OF THE TYPE AND SIZE SPECIFIED.
18. JUNCTION BOXES SHALL INCLUDE THE INTENDED USE CAST INTO THE COVER. SEE SPECIAL PROVISIONS.
19. MTD KIOSKS WILL BE PROVIDED BY OTHERS. THE CONTRACTOR SHALL COORDINATE THE CONDUIT FEEDS WITH THE CHAMPAIGN-URBANA MASS TRANSIT DISTRICT AND AS DIRECTED BY THE ENGINEER. THIS COORDINATION SHALL BE INCLUDED IN THE COST OF THE CONDUITS AND NO ADDITIONAL COMPENSATION WILL BE ALLOWED. SEE SPECIAL PROVISIONS FOR ADDITIONAL INFORMATION.

Clark Dietz ENGINEERS

FILE NAME = P:\C0010720_MCORE\Plans\sheets\Project1\P1-sht-lighting.dgn

PLOT DATE = 8/25/2016 1:39:15 PM

DESIGNED - M.L.S.		REVISED - M.L.S.	
DRAWN - L.F.D.		REVISED - R.J.H.	
CHECKED - L.M.Z.		REVISED - S.M.W.	
DATE - MARCH 2016		REVISED - AUGUST 2016	

STATE OF ILLINOIS
DEPARTMENT OF TRANSPORTATION

ROADWAY LIGHTING PLANS - GENERAL PLAN

SCALE : 1"=100' | SHEET NO. 116 OF 236 SHEETS | STA. | TO STA.

F.A.U. RTE.	SECTION	COUNTY	TOTAL SHEETS	SHEET NO.
	15-00304-01-PV	CHAMPAIGN	236	116
	MCORE PROJECT 1	CONTRACT NO. 91539		
	JOB NO. C-95-305-16 ILLINOIS FED. AID PROJECT TIG-5181(057)			

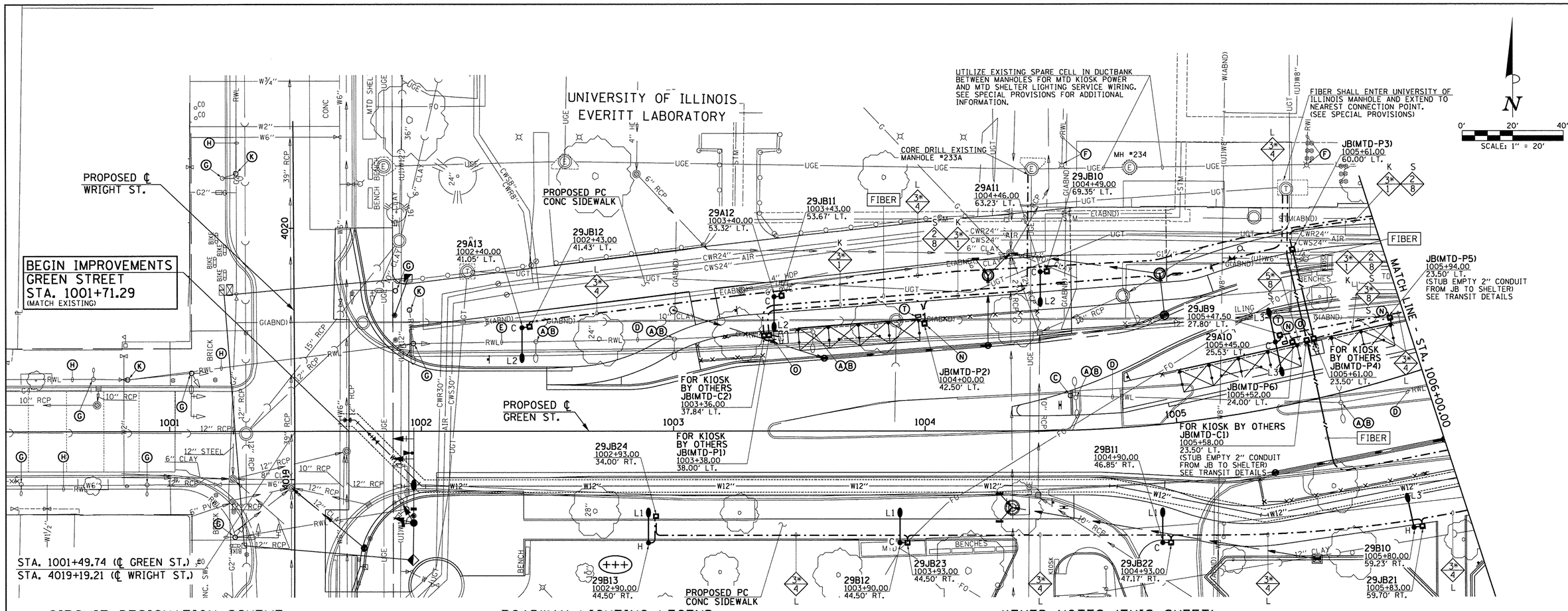

CIRCUIT DESIGNATION SCHEME

LIGHTING CONTROLLER — CIRCUIT — POLE NUMBER

29A3
1003+57.00 80.17' LT. — POLE LOCATION

NOTE;
THE CONTRACTOR SHALL PROVIDE A PERMANENT STICKER INSIDE HAND HOLE OF EACH LIGHT POLE INDICATING THE LIGHTING CONTROLLER, CIRCUIT AND POLE NUMBER.

CONDUCTOR SYMBOL SCHEME

L
3*
6

- CIRCUIT TYPE: L = CITY OF URBANA LIGHTING, K = FEEDER (MTD KIOSK), S = FEEDER (MTD SHELTER).
- NUMBER OF CONDUCTORS OF THIS SIZE IN CONDUIT. * INDICATES INCLUDES GROUND
- CONDUCTOR SIZE FOR COPPER CONDUCTORS IN AWG

FIBER — SINGLE MODE/MULTI-MODE FIBER OPTIC CABLE (SEE SPECIAL PROVISIONS)

JUNCTION BOX DESIGNATION SCHEME

LIGHTING CONTROLLER — JUNCTION BOX NUMBER

29JB1
15+50.00 30.00' LT. — LOCATION

MTD JUNCTION BOXES:
29JB (MTD-C/P1)
P = POWER
C = COMMUNICATIONS

ROADWAY LIGHTING LEGEND

EXISTING	PROPOSED	DESCRIPTION
	L* H	ROADWAY LED LUMINAIRE ("L*" INDICATES LUMINAIRE TYPE, SEE SPECIAL PROVISIONS FOR DESCRIPTION OF LUMINAIRE TYPE). LUMINAIRE MOUNTED ON 10' DAVIT ARM MOUNTED ON 30' ALUMINUM LIGHT POLE MOUNTED FOUNDATION ("H" INDICATES HELIX FOUNDATION, "C" INDICATES CONCRETE FOUNDATION).
		PEDESTRIAN LED LUMINAIRE. LUMINAIRE MOUNTED ON A DIRECTLY IMBEDDED 13' PRE-STRESSED CONCRETE LIGHT POLE. LUMINAIRE SHALL BE CONNECTED TO U OF I FACILITIES AND WILL BE MAINTAINED BY THE U OF I.
		TWO (2) ROADWAY LED LUMINAIRES ("L*" INDICATES LUMINAIRE TYPE, SEE SPECIAL PROVISIONS FOR DESCRIPTION OF LUMINAIRE TYPE). LUMINAIRES MOUNTED ON TWIN 10' DAVIT ARMS MOUNTED ON 30' ALUMINUM LIGHT POLE MOUNTED ON CONCRETE TYPE FOUNDATION.
		ROADWAY LED LUMINAIRE (SEE SPECIAL PROVISIONS FOR DESCRIPTION OF LUMINAIRE TYPE). LUMINAIRE MOUNTED ON 15' ALUMINUM TRUSS ARM MOUNTED ON 35' TRAFFIC SIGNAL MAST ARM POLE. TRUSS ARM, POLE AND FOUNDATION TO BE PROVIDED AND INSTALLED AS PART OF THE TRAFFIC SIGNAL INSTALLATION. COORDINATE LUMINAIRE INSTALLATION WITH POLE AND SIGNAL INSTALLATION.
		ROADWAY LIGHTING UNIT WITH LUMINAIRE AND POLE
		PORTLAND CEMENT CONCRETE HANDHOLE
		PROPOSED LIGHTING CONTROLLER (* AS NOTED)
		COMPOSITE TYPE JUNCTION BOX, SPECIAL (12"W x 12"L x 12"D)
		GULFBOX JUNCTION, COMPOSITE CONCRETE (13"W x 24"L x 12"D)
		2" PVC CONDUIT (SCHEDULE 80), AUGURED
		2" PVC CONDUIT (SCHEDULE 40), TRENCHED
UGE		UNDERGROUND CONDUIT
OHE		OVERHEAD ELECTRICAL CONDUCTORS
RWL		ROADWAY LIGHTING CONDUIT/CONDUCTORS

KEYED NOTES (THIS SHEET)

- (A) EXISTING LIGHTING UNIT (POLE AND LUMINAIRE) TO BE REMOVED COMPLETE.
- (B) EXISTING CONCRETE FOUNDATION TO BE REMOVED COMPLETE.
- (C) EXISTING JUNCTION BOX TO BE REMOVED COMPLETE.
- (D) EXISTING CONDUIT AND CONDUCTORS TO BE CUT OFF BELOW GRADE AND ABANDONED IN PLACE.
- (E) REMOVE EXISTING CONDUCTORS BACK TO NEAREST JUNCTION BOX OR LIGHTING UNIT TO REMAIN. CUT OFF CONDUIT BELOW GRADE AND ABANDON IN PLACE.
- (F) UNIVERSITY OF ILLINOIS EXISTING LIGHTING EQUIPMENT AND SYSTEM TO REMAIN AS PRESENTLY INSTALLED.
- (G) EXISTING LIGHTING UNIT (POLE AND LUMINAIRE) TO REMAIN.
- (H) EXISTING CONDUIT AND CONDUCTORS TO REMAIN.
- (K) EXISTING HANDHOLE TO REMAIN.
- (L) CONNECT ILLUMINATED STREET SIGN TO SAME ROADWAY LIGHTING CIRCUIT THAT IS SERVING ROADWAY LIGHTING LUMINAIRE ON THIS SIGNAL POLE.
- (N) PROVIDE COMPOSITE TYPE JUNCTION BOX FOR LIGHTING CONNECTION TO MTD BUS SHELTER. PROVIDE 2" CONDUIT TO REAR LEG OF SHELTER FOR LIGHTING WIRING. COORDINATE WITH SHELTER MANUFACTURER. CONNECT SHELTER LIGHTING TO MTD SHELTER LIGHTING CIRCUIT FROM ELECTRONIC TIME SWITCH PEDESTAL. PROVIDE IN-LINE FUSE HOLDER WITH 15A FUSE FOR SHELTER LIGHTING DISCONNECT.
- (O) PROVIDE TWO COMPOSITE TYPE JUNCTION BOXES FOR POWER AND COMMUNICATIONS CONNECTIONS TO MTD KIOSK. PROVIDE TWO 2" CONDUITS TO KIOSK FOR POWER AND COMMUNICATIONS WIRING. COORDINATE WITH KIOSK MANUFACTURER.
- (T) PROVIDE ELECTRONIC TIME SWITCH FOR MTD BUS SHELTER CONSISTING OF 18" PEDESTAL WITH LOCKABLE COVER AND ELECTRONIC TIME SWITCH. SEE DETAILS FOR ADDITIONAL INFORMATION.
- (I) (J) (M) (P) (R) (S) NOT USED

(+++) THE CONTRACTOR WILL BE RESPONSIBLE FOR PROTECTING THE EXISTING HEDGE FROM DAMAGE DURING THE INSTALLATION OF THE PROPOSED LIGHTING SYSTEM. THE CONTRACTOR WILL BE ALLOWED TO REMOVE THE EXISTING HEDGE A MAXIMUM OF 30" WIDE ONLY WHERE IT CONFLICTS WITH THE PROPOSED LIGHT POLE AND FOUNDATION INSTALLATIONS. THE CONTRACTOR WILL BE RESPONSIBLE FOR ANY DAMAGES AS DETERMINED BY THE ENGINEER.

UNIVERSITY OF ILLINOIS
ILLINI UNION

Clark Dietz ENGINEERS

FILE NAME = P:\C0010720_MCORE\Plans\sheets\Project1\P1-sht-lighting.dgn

PLOT DATE = 8/25/2016 1:39:16 PM

DESIGNED - M.L.S.	REVISED - M.L.S.	STATE OF ILLINOIS DEPARTMENT OF TRANSPORTATION	ROADWAY LIGHTING PLANS - GREEN STREET
DRAWN - L.F.D.	REVISED - R.J.H.		
CHECKED - L.M.Z.	REVISED - S.M.W.		
DATE - MARCH 2016	REVISED - AUGUST 2016		SCALE: 1"=20' | SHEET NO. 117 OF 236 SHEETS | STA. 1001+71 TO STA. 1006+00

F.A.U. RTE.	SECTION	COUNTY	TOTAL SHEETS	SHEET NO.
	15-00304-01-PV	CHAMPAIGN	236	117
	MCORE PROJECT 1	CONTRACT NO. 91539		
JOB NO. C-95-305-16	ILLINOIS	FED. AID PROJECT TIG-5181(057)		

MTD KIOSK POWER AND MTD SHELTER LIGHTING SERVICE CONDUIT AND WIRING SHALL ENTER UNIVERSITY OF ILLINOIS ELECTRICAL MANHOLE. EXTEND MTD KIOSK POWER AND MTD SHELTER LIGHTING WIRING THROUGH SPARE CELL IN EXISTING DUCTBANK TO ENGINEERING HALL. PROVIDE (3)-2" RGS CONDUITS WITH MTD KIOSK POWER WIRING AND MTD SHELTER LIGHTING WIRING APPROXIMATELY 100' FROM WHERE DUCTBANK ENTERS THE BUILDING TO EXISTING 120/208 VOLT PANEL. SEE SPECIAL PROVISIONS FOR ADDITIONAL INFORMATION.

UTILIZE EXISTING SPARE CELL IN DUCTBANK BETWEEN MANHOLES FOR MTD KIOSK POWER AND MTD SHELTER LIGHTING SERVICE WIRING. SEE SPECIAL PROVISIONS FOR ADDITIONAL INFORMATION.

100'± TO DUCTBANK ENTRANCE IN ENGINEERING HALL FROM MANHOLE #170/170A

UNIVERSITY OF ILLINOIS MATERIALS SCIENCE AND ENGINEERING

UNIVERSITY OF ILLINOIS ENGINEERING HALL

PROPOSED PC CONC SIDEWALK

CORE DRILL EXISTING MANHOLE #170/171A

PROPOSED ℄ GREEN ST.

MATCH LINE - STA. 1006+00.00

MATCH LINE - STA. 1011+50.00

FOR KIOSK BY OTHERS JB(MTD-C3) 1006+96.00 42.40' RT.

JB(MTD-P9) 1007+53.50 36.00' RT.

JB(MTD-P7) 1006+86.00 42.50' RT.

FOR KIOSK BY OTHERS JB(MTD-P8) 1006+96.00 42.80' RT.

SEE ILLINI UNION LIGHITNG PLANS FOR ADDITIONAL INFORMATION

PROPOSED PC CONC SIDEWALK

STA. 1010+73.87 (℄ GREEN ST.) = STA. 1101+50 (℄ MATHEWS AVE.)

PROPOSED ℄ MATHEWS AVE.

N

0' 20' 40'

SCALE: 1" = 20'

CIRCUIT DESIGNATION SCHEME

LIGHTING CONTROLLER — CIRCUIT — POLE NUMBER

29A3
1003+57.00
80.17' LT. — POLE LOCATION

NOTE:
THE CONTRACTOR SHALL PROVIDE A PERMANENT STICKER INSIDE HAND HOLE OF EACH LIGHT POLE INDICATING THE LIGHTING CONTROLLER, CIRCUIT AND POLE NUMBER.

CONDUCTOR SYMBOL SCHEME

L
3*
6

- CIRCUIT TYPE: L = CITY OF URBANA LIGHTING, K = FEEDER (MTD KIOSK), S = FEEDER (MTD SHELTER).
- NUMBER OF CONDUCTORS OF THIS SIZE IN CONDUIT. * INDICATES INCLUDES GROUND
- CONDUCTOR SIZE FOR COPPER CONDUCTORS IN AWG

FIBER — SINGLE MODE/MULTI-MODE FIBER OPTIC CABLE (SEE SPECIAL PROVISIONS)

JUNCTION BOX DESIGNATION SCHEME

LIGHTING CONTROLLER — JUNCTION BOX NUMBER

29JB1
15+50.00
30.00' LT. — LOCATION

MTD JUNCTION BOXES:
29JB (MTD-C/P1)
P = POWER
C = COMMUNICATIONS

ROADWAY LIGHTING LEGEND

EXISTING	PROPOSED	DESCRIPTION
	L* H	ROADWAY LED LUMINAIRE ("L*" INDICATES LUMINAIRE TYPE, SEE SPECIAL PROVISIONS FOR DESCRIPTION OF LUMINAIRE TYPE). LUMINAIRE MOUNTED ON 10' DAVIT ARM MOUNTED ON 30' ALUMINUM LIGHT POLE MOUNTED FOUNDATION ("H" INDICATES HELIX FOUNDATION, "C" INDICATES CONCRETE FOUNDATION).
		PEDESTRIAN LED LUMINAIRE. LUMINAIRE MOUNTED ON A DIRECTLY IMBEDDED 13' PRE-STRESSED CONCRETE LIGHT POLE. LUMINAIRE SHALL BE CONNECTED TO U OF I FACILITIES AND WILL BE MAINTAINED BY THE U OF I.
		TWO (2) ROADWAY LED LUMINAIRES ("L*" INDICATES LUMINAIRE TYPE, SEE SPECIAL PROVISIONS FOR DESCRIPTION OF LUMINAIRE TYPE). LUMINAIRES MOUNTED ON TWIN 10' DAVIT ARMS MOUNTED ON 30' ALUMINUM LIGHT POLE MOUNTED ON CONCRETE TYPE FOUNDATION.
		ROADWAY LED LUMINAIRE (SEE SPECIAL PROVISIONS FOR DESCRIPTION OF LUMINAIRE TYPE). LUMINAIRE MOUNTED ON 15' ALUMINUM TRUSS ARM MOUNTED ON 35' TRAFFIC SIGNAL MAST ARM POLE. TRUSS ARM, POLE AND FOUNDATION TO BE PROVIDED AND INSTALLED AS PART OF THE TRAFFIC SIGNAL INSTALLATION. COORDINATE LUMINAIRE INSTALLATION WITH POLE AND SIGNAL INSTALLATION.
		ROADWAY LIGHTING UNIT WITH LUMINAIRE AND POLE
		PORTLAND CEMENT CONCRETE HANDHOLE
		PROPOSED LIGHTING CONTROLLER (* AS NOTED)
		COMPOSITE TYPE JUNCTION BOX, SPECIAL (12"W x 12"L x 12"D)
		GULFBOX JUNCTION, COMPOSITE CONCRETE (13"W x 24"L x 12"D)
		2" PVC CONDUIT (SCHEDULE 80), AUGURED
		2" PVC CONDUIT (SCHEDULE 40), TRENCHED
UGE		UNDERGROUND CONDUIT
OHE		OVERHEAD ELECTRICAL CONDUCTORS
RWL		ROADWAY LIGHTING CONDUIT/CONDUCTORS

KEYED NOTES (THIS SHEET)

- (A) EXISTING LIGHTING UNIT (POLE AND LUMINAIRE) TO BE REMOVED COMPLETE.
- (B) EXISTING CONCRETE FOUNDATION TO BE REMOVED COMPLETE.
- (D) EXISTING CONDUIT AND CONDUCTORS TO BE CUT OFF BELOW GRADE AND ABANDONED IN PLACE.
- (F) UNIVERSITY OF ILLINOIS EXISTING LIGHTING EQUIPMENT AND SYSTEM TO REMAIN AS PRESENTLY INSTALLED.
- (G) EXISTING LIGHTING UNIT (POLE AND LUMINAIRE) TO REMAIN.
- (H) EXISTING CONDUIT AND CONDUCTORS TO REMAIN.
- (K) EXISTING HANDHOLE TO REMAIN.
- (N) PROVIDE COMPOSITE TYPE JUNCTION BOX FOR LIGHTING CONNECTION TO MTD BUS SHELTER. PROVIDE 2" CONDUIT TO REAR LEG OF SHELTER FOR LIGHTING WIRING. COORDINATE WITH SHELTER MANUFACTURER. CONNECT SHELTER LIGHTING TO MTD SHELTER LIGHTING CIRCUIT FROM ELECTRONIC TIME SWITCH PEDESTAL. PROVIDE IN-LINE FUSE HOLDER WITH 15A FUSE FOR SHELTER LIGHTING DISCONNECT.
- (O) PROVIDE TWO COMPOSITE TYPE JUNCTION BOXES FOR POWER AND COMMUNICATIONS CONNECTIONS TO MTD KIOSK. PROVIDE TWO 2" CONDUITS TO KIOSK FOR POWER AND COMMUNICATIONS WIRING. COORDINATE WITH KIOSK MANUFACTURER.
- (T) PROVIDE ELECTRONIC TIME SWITCH FOR MTD BUS SHELTER CONSISTING OF 18" PEDESTAL WITH LOCKABLE COVER AND ELECTRONIC TIME SWITCH. SEE DETAILS FOR ADDITIONAL INFORMATION.

(C) (E) (I) (J) (L) (M) (P) (R) (S) NOT USED

Clark Dietz ENGINEERS

FILE NAME = P:\C0010720_MCORE\Plans\sheets\Project1\P1-sht-lighting.dgn

PLOT DATE = 8/25/2016 1:39:18 PM

DESIGNED - M.L.S.	REVISED - M.L.S.	STATE OF ILLINOIS DEPARTMENT OF TRANSPORTATION	ROADWAY LIGHTING PLANS - GREEN STREET
DRAWN - L.F.D.	REVISED - R.J.H.		
CHECKED - L.M.Z.	REVISED - S.M.W.		
DATE - MARCH 2016	REVISED - AUGUST 2016		SCALE: 1"=20' | SHEET NO. 118 OF 236 SHEETS | STA. 1006+00 TO STA. 1011+50

F.A.U. RTE.	SECTION	COUNTY	TOTAL SHEETS	SHEET NO.
	15-00304-01-PV	CHAMPAIGN	236	118
	MCORE PROJECT 1	CONTRACT NO. 91539		
JOB NO. C-95-305-16	ILLINOIS	FED. AID PROJECT TIG-5181(057)		

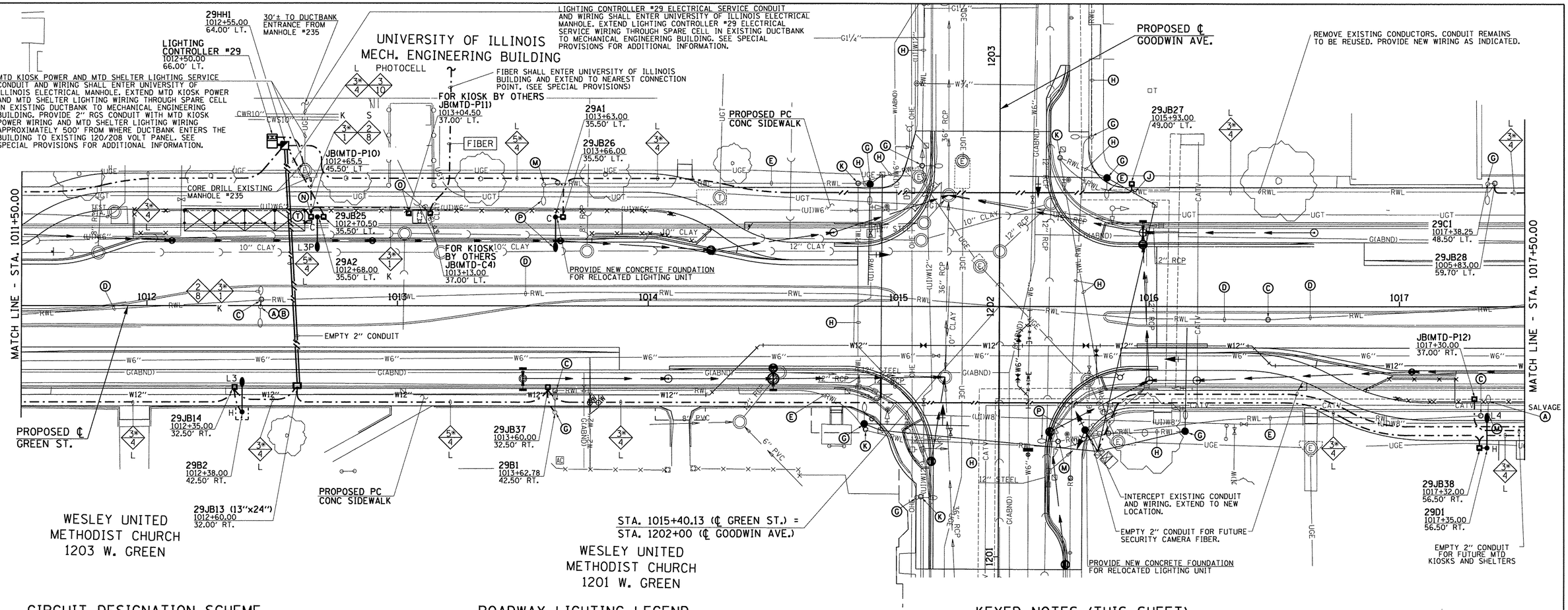

CIRCUIT DESIGNATION SCHEME

LIGHTING CONTROLLER — CIRCUIT — POLE NUMBER

29A3
1003+57.00
80.17' LT. — POLE LOCATION

NOTE:
THE CONTRACTOR SHALL PROVIDE A PERMANENT STICKER INSIDE HAND HOLE OF EACH LIGHT POLE INDICATING THE LIGHTING CONTROLLER, CIRCUIT AND POLE NUMBER.

CONDUCTOR SYMBOL SCHEME

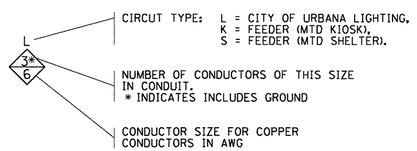

CIRCUIT TYPE: L = CITY OF URBANA LIGHTING, K = FEEDER (MTD KIOSK), S = FEEDER (MTD SHELTER).

NUMBER OF CONDUCTORS OF THIS SIZE IN CONDUIT.
* INDICATES INCLUDES GROUND

CONDUCTOR SIZE FOR COPPER CONDUCTORS IN AWG

FIBER — SINGLE MODE/MULTI-MODE FIBER OPTIC CABLE (SEE SPECIAL PROVISIONS)

JUNCTION BOX DESIGNATION SCHEME

LIGHTING CONTROLLER — JUNCTION BOX NUMBER

29JB1
15+50.00
30.00' LT. — LOCATION

MTD JUNCTION BOXES:
29JB (MTD-C/P1)
P = POWER
C = COMMUNICATIONS

ROADWAY LIGHTING LEGEND

EXISTING	PROPOSED	DESCRIPTION
	L* H	ROADWAY LED LUMINAIRE ("L*" INDICATES LUMINAIRE TYPE, SEE SPECIAL PROVISIONS FOR DESCRIPTION OF LUMINAIRE TYPE). LUMINAIRE MOUNTED ON 10' DAVIT ARM MOUNTED ON 30' ALUMINUM LIGHT POLE MOUNTED FOUNDATION ("H" INDICATES HELIX FOUNDATION, "C" INDICATES CONCRETE FOUNDATION).
		PEDESTRIAN LED LUMINAIRE. LUMINAIRE MOUNTED ON A DIRECTLY IMBEDDED 13' PRE-STRESSED CONCRETE LIGHT POLE. LUMINAIRE SHALL BE CONNECTED TO U OF I FACILITIES AND WILL BE MAINTAINED BY THE U OF I.
		TWO (2) ROADWAY LED LUMINAIRES ("L*" INDICATES LUMINAIRE TYPE, SEE SPECIAL PROVISIONS FOR DESCRIPTION OF LUMINAIRE TYPE). LUMINAIRES MOUNTED ON TWIN 10' DAVIT ARMS MOUNTED ON 30' ALUMINUM LIGHT POLE MOUNTED ON CONCRETE TYPE FOUNDATION.
		ROADWAY LED LUMINAIRE (SEE SPECIAL PROVISIONS FOR DESCRIPTION OF LUMINAIRE TYPE). LUMINAIRE MOUNTED ON 15' ALUMINUM TRUSS ARM MOUNTED ON 35' TRAFFIC SIGNAL MAST ARM POLE. TRUSS ARM, POLE AND FOUNDATION TO BE PROVIDED AND INSTALLED AS PART OF THE TRAFFIC SIGNAL INSTALLATION. COORDINATE LUMINAIRE INSTALLATION WITH POLE AND SIGNAL INSTALLATION.
		ROADWAY LIGHTING UNIT WITH LUMINAIRE AND POLE
		PORTLAND CEMENT CONCRETE HANDHOLE
		PROPOSED LIGHTING CONTROLLER (* AS NOTED)
		COMPOSITE TYPE JUNCTION BOX, SPECIAL (12"W x 12"L x 12"D)
		GULFBOX JUNCTION, COMPOSITE CONCRETE (13"W x 24"L x 12"D)
		2" PVC CONDUIT (SCHEDULE 80), AUGURED
		2" PVC CONDUIT (SCHEDULE 40), TRENCHED
UGE		UNDERGROUND CONDUIT
OHE		OVERHEAD ELECTRICAL CONDUCTORS
		ROADWAY LIGHTING CONDUIT/CONDUCTORS

KEYED NOTES (THIS SHEET)

(A) EXISTING LIGHTING UNIT (POLE AND LUMINAIRE) TO BE REMOVED COMPLETE.
(B) EXISTING CONCRETE FOUNDATION TO BE REMOVED COMPLETE.
(C) EXISTING JUNCTION BOX TO BE REMOVED COMPLETE.
(D) EXISTING CONDUIT AND CONDUCTORS TO BE CUT OFF BELOW GRADE AND ABANDONED IN PLACE.
(E) REMOVE EXISTING CONDUCTORS BACK TO NEAREST JUNCTION BOX OR LIGHTING UNIT TO REMAIN. CUT OFF CONDUIT BELOW GRADE AND ABANDON IN PLACE.
(G) EXISTING LIGHTING UNIT (POLE AND LUMINAIRE) TO REMAIN.
(H) EXISTING CONDUIT AND CONDUCTORS TO REMAIN.
(J) INTERCEPT EXISTING CONDUIT AND EXTEND TO NEW JUNCTION BOX.
(K) EXISTING HANDHOLE TO REMAIN.
(M) EXISTING METAL HELIX FOUNDATION TO BE REMOVED COMPLETE. (SEE SPECIAL PROVISIONS)
(N) PROVIDE COMPOSITE TYPE JUNCTION BOX FOR LIGHTING CONNECTION TO MTD BUS SHELTER. PROVIDE 2" CONDUIT TO REAR LEG OF SHELTER FOR LIGHTING WIRING. COORDINATE WITH SHELTER MANUFACTURER. CONNECT SHELTER LIGHTING TO MTD SHELTER LIGHTING CIRCUIT FROM ELECTRONIC TIME SWITCH PEDESTAL. PROVIDE IN-LINE FUSE HOLDER WITH 15A FUSE FOR SHELTER LIGHTING DISCONNECT.
(O) PROVIDE TWO COMPOSITE TYPE JUNCTION BOXES FOR POWER AND COMMUNICATIONS CONNECTIONS TO MTD KIOSK. PROVIDE TWO 2" CONDUITS TO KIOSK FOR POWER AND COMMUNICATIONS WIRING. COORDINATE WITH KIOSK MANUFACTURER.
(P) RELOCATE EXISTING ROADWAY LIGHTING UNIT.
(T) PROVIDE ELECTRONIC TIME SWITCH FOR MTD BUS SHELTER CONSISTING OF 18" PEDESTAL WITH LOCKABLE COVER AND ELECTRONIC TIME SWITCH. SEE DETAILS FOR ADDITIONAL INFORMATION.

(F) (I) (L) (R) (S) NOT USED

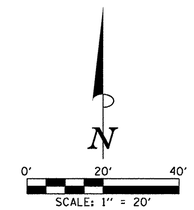

FILE NAME = P:\C0010720_MCORE\Plans\sheets\Project1\P1-sht-lighting.dgn	DESIGNED - M.L.S.	REVISED - M.L.S.	
PLOT DATE = 8/25/2016 1:39:21 PM	DRAWN - L.F.D.	REVISED - R.J.H.	
	CHECKED - L.M.Z.	REVISED - S.M.W.	
	DATE - MARCH 2016	REVISED - AUGUST 2016	

STATE OF ILLINOIS
DEPARTMENT OF TRANSPORTATION

ROADWAY LIGHTING PLANS - GREEN STREET

SCALE: 1"=20' | SHEET NO. 119 OF 236 SHEETS | STA. 1011+50 TO STA. 1017+50

F.A.U. RTE.	SECTION	COUNTY	TOTAL SHEETS	SHEET NO.
	15-00304-01-PV	CHAMPAIGN	236	119
	MCORE PROJECT 1	CONTRACT NO. 91539		
JOB NO. C-95-305-16	ILLINOIS	FED. AID PROJECT TIG-5181(057)		

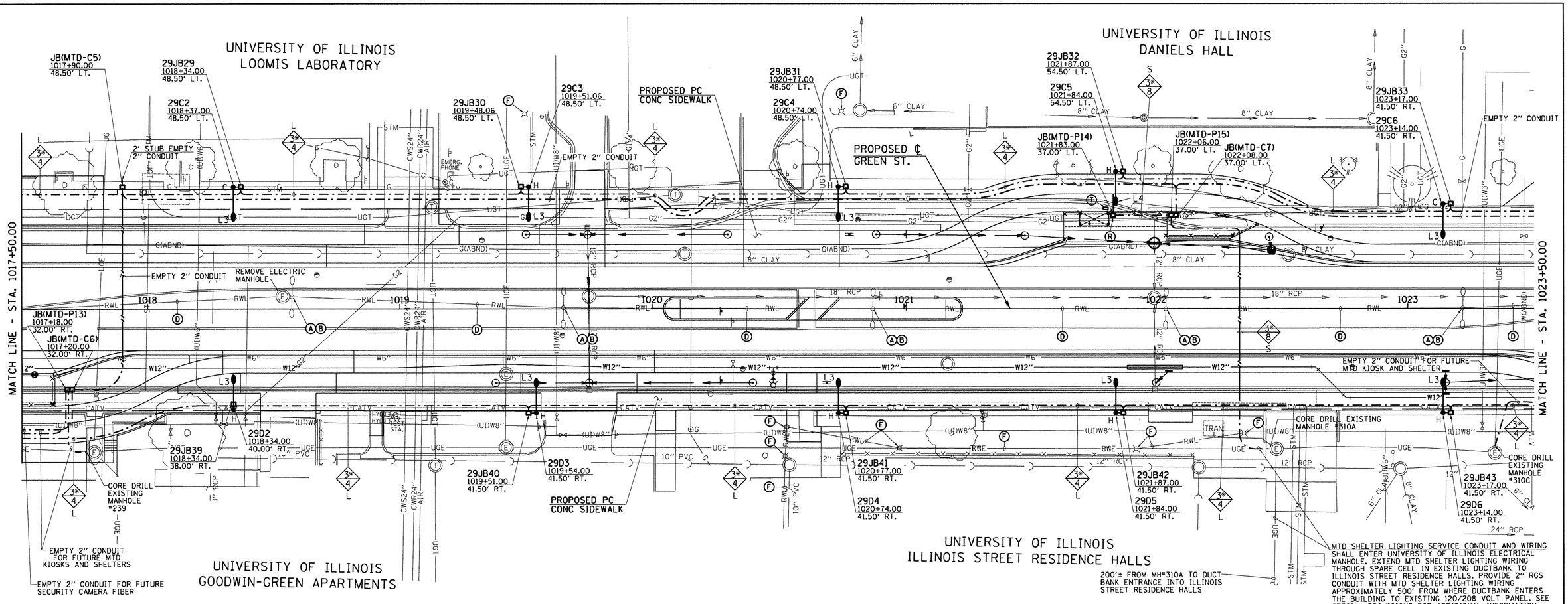

CIRCUIT DESIGNATION SCHEME

LIGHTING CONTROLLER — CIRCUIT — POLE NUMBER

29A3
1003+57.00
80.17' LT. — POLE LOCATION

NOTE:
THE CONTRACTOR SHALL PROVIDE A PERMANENT STICKER INSIDE HAND HOLE OF EACH LIGHT POLE INDICATING THE LIGHTING CONTROLLER, CIRCUIT AND POLE NUMBER.

CONDUCTOR SYMBOL SCHEME

L — 3* — 6

- CIRCUT TYPE: L = CITY OF URBANA LIGHTING, K = FEEDER (MTD KIOSK), S = FEEDER (MTD SHELTER).
- NUMBER OF CONDUCTORS OF THIS SIZE IN CONDUIT. * INDICATES INCLUDES GROUND
- CONDUCTOR SIZE FOR COPPER CONDUCTORS IN AWG

FIBER — SINGLE MODE/MULTI-MODE FIBER OPTIC CABLE (SEE SPECIAL PROVISIONS)

JUNCTION BOX DESIGNATION SCHEME

LIGHTING CONTROLLER — JUNCTION BOX NUMBER

29JB1
15+50.00
30.00' LT. — LOCATION

MTD JUNCTION BOXES:
29JB (MTD-C/P1)
P = POWER
C = COMMUNICATIONS

ROADWAY LIGHTING LEGEND

EXISTING	PROPOSED	DESCRIPTION
	L# H	ROADWAY LED LUMINAIRE ("L#" INDICATES LUMINAIRE TYPE, SEE SPECIAL PROVISIONS FOR DESCRIPTION OF LUMINAIRE TYPE). LUMINAIRE MOUNTED ON 10' DAVIT ARM MOUNTED ON 30' ALUMINUM LIGHT POLE MOUNTED FOUNDATION ("H" INDICATES HELIX FOUNDATION, "C" INDICATES CONCRETE FOUNDATION).
		PEDESTRIAN LED LUMINAIRE. LUMINAIRE MOUNTED ON A DIRECTLY IMBEDDED 13' PRE-STRESSED CONCRETE LIGHT POLE. LUMINAIRE SHALL BE CONNECTED TO U OF I FACILITIES AND WILL BE MAINTAINED BY THE U OF I.
		TWO (2) ROADWAY LED LUMINAIRES ("L#" INDICATES LUMINAIRE TYPE, SEE SPECIAL PROVISIONS FOR DESCRIPTION OF LUMINAIRE TYPE). LUMINAIRES MOUNTED ON TWIN 10' DAVIT ARMS MOUNTED ON 30' ALUMINUM LIGHT POLE MOUNTED ON CONCRETE TYPE FOUNDATION.
		ROADWAY LED LUMINAIRE (SEE SPECIAL PROVISIONS FOR DESCRIPTION OF LUMINAIRE TYPE). LUMINAIRE MOUNTED ON 15' ALUMINUM TRUSS ARM MOUNTED ON 35' TRAFFIC SIGNAL MAST ARM POLE. TRUSS ARM, POLE AND FOUNDATION TO BE PROVIDED AND INSTALLED AS PART OF THE TRAFFIC SIGNAL INSTALLATION. COORDINATE LUMINAIRE INSTALLATION WITH POLE AND SIGNAL INSTALLATION.
		ROADWAY LIGHTING UNIT WITH LUMINAIRE AND POLE
		PORTLAND CEMENT CONCRETE HANDHOLE
		PROPOSED LIGHTING CONTROLLER (* AS NOTED)
		COMPOSITE TYPE JUNCTION BOX, SPECIAL (12"W x 12"L x 12"D)
		GULFBOX JUNCTION, COMPOSITE CONCRETE (13"W x 24"L x 12"D)
		2" PVC CONDUIT (SCHEDULE 80), AUGURED
		2" PVC CONDUIT (SCHEDULE 40), TRENCHED
UGE		UNDERGROUND CONDUIT
OHE		OVERHEAD ELECTRICAL CONDUCTORS
RWL		ROADWAY LIGHTING CONDUIT/CONDUCTORS

KEYED NOTES (THIS SHEET)

- (A) EXISTING LIGHTING UNIT (POLE AND LUMINAIRE) TO BE REMOVED COMPLETE.
- (B) EXISTING CONCRETE FOUNDATION TO BE REMOVED COMPLETE.
- (C) EXISTING JUNCTION BOX TO BE REMOVED COMPLETE.
- (D) EXISTING CONDUIT AND CONDUCTORS TO BE CUT OFF BELOW GRADE AND ABANDONED IN PLACE.
- (F) UNIVERSITY OF ILLINOIS EXISTING LIGHTING EQUIPMENT AND SYSTEM TO REMAIN AS PRESENTLY INSTALLED.
- (R) PROVIDE COMPOSITE TYPE JUNCTION BOX FOR LIGHTING CONNECTION TO MTD BUS SHELTER. PROVIDE 2" CONDUIT TO REAR LEG OF SHELTER FOR LIGHTING WIRING. COORDINATE WITH SHELTER MANUFACTURER. IN JUNCTION BOX, CONNECT SHELTER LIGHTING TO MTD SHELTER LIGHTING CIRCUIT FROM ELECTRONIC TIME SWITCH PEDESTAL. PROVIDE IN-LINE FUSE HOLDER WITH 15A FUSE FOR SHELTER LIGHTING DISCONNECT.
- (T) PROVIDE ELECTRONIC TIME SWITCH FOR MTD BUS SHELTER CONSISTING OF 18" PEDESTAL WITH LOCKABLE COVER AND ELECTRONIC TIME SWITCH. SEE DETAILS FOR ADDITIONAL INFORMATION.
- (E) (G) (H) (I) (J) (K) (L) (M) (N) (O) (P) (S) NOT USED

MTD SHELTER LIGHTING SERVICE CONDUIT AND WIRING SHALL ENTER UNIVERSITY OF ILLINOIS ELECTRICAL MANHOLE. EXTEND MTD SHELTER LIGHTING WIRING THROUGH SPARE CELL IN EXISTING DUCTBANK TO ILLINOIS STREET RESIDENCE HALLS. PROVIDE 2" RGS CONDUIT WITH MTD SHELTER LIGHTING WIRING APPROXIMATELY 500' FROM WHERE DUCTBANK ENTERS THE BUILDING TO EXISTING 120/208 VOLT PANEL. SEE SPECIAL PROVISIONS FOR ADDITIONAL INFORMATION.

200'± FROM MH#310A TO DUCT BANK ENTRANCE INTO ILLINOIS STREET RESIDENCE HALLS

N

0' 20' 40'

SCALE: 1" = 20'

Clark Dietz ENGINEERS

FILE NAME = P:\C0010720_MCORE\Plans\sheets\Project1\P1-sht-lighting.dgn	DESIGNED - M.L.S.	REVISED -	STATE OF ILLINOIS DEPARTMENT OF TRANSPORTATION
PLOT DATE = 8/25/2016 2:13:08 PM	DRAWN - L.F.D.	REVISED -	
	CHECKED - L.M.Z.	REVISED -	
	DATE - MARCH 2016	REVISED -	

ROADWAY LIGHTING PLANS - GREEN STREET

SCALE: 1"=20' | SHEET NO. 120 OF 236 SHEETS | STA. 1017+50 TO STA. 1023+50

F.A.U. RTE.	SECTION	COUNTY	TOTAL SHEETS	SHEET NO.
	15-00304-01-PV	CHAMPAIGN	236	120
	MCORE PROJECT 1	CONTRACT NO. 91539		
JOB NO. C-95-305-16	ILLINOIS	FED. AID PROJECT TIG-5181(057)		

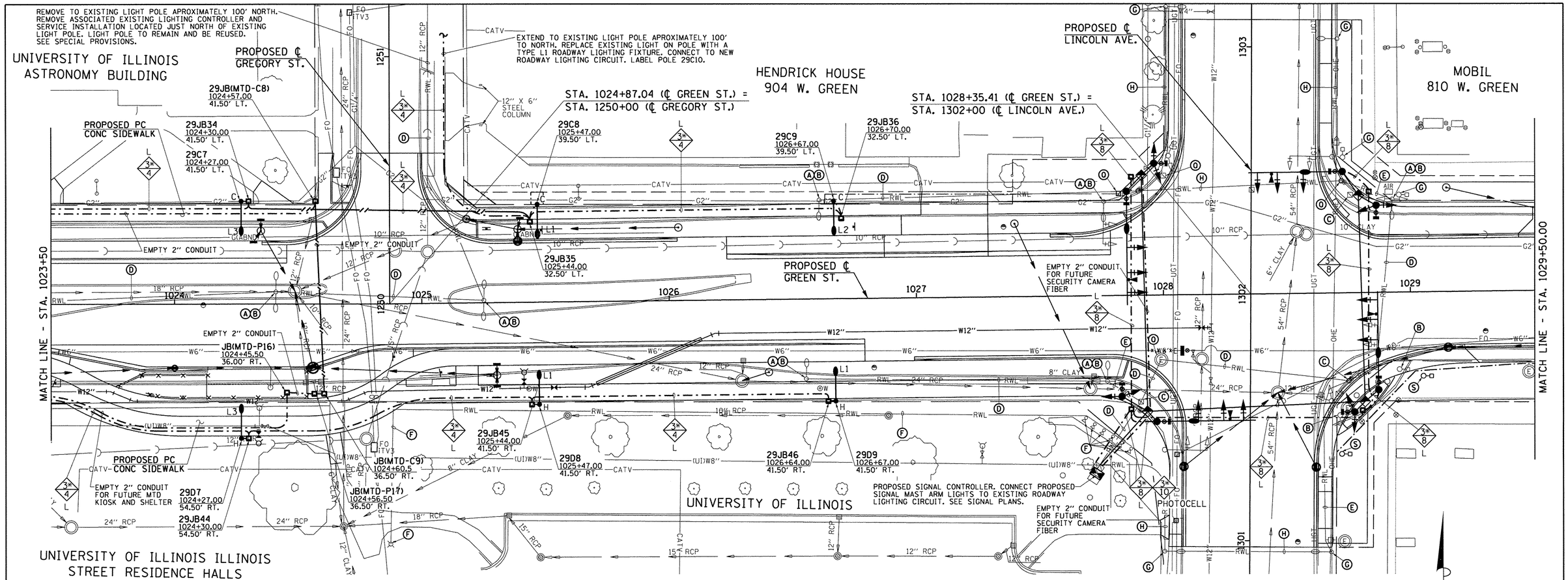

CIRCUIT DESIGNATION SCHEME

LIGHTING CONTROLLER — CIRCUIT — POLE NUMBER

29A3
1003+57.00
80.17' LT. — POLE LOCATION

NOTE:
THE CONTRACTOR SHALL PROVIDE A PERMANENT STICKER INSIDE HAND HOLE OF EACH LIGHT POLE INDICATING THE LIGHTING CONTROLLER, CIRCUIT AND POLE NUMBER.

CONDUCTOR SYMBOL SCHEME

L
3#6

CIRCUIT TYPE: L = CITY OF URBANA LIGHTING, K = FEEDER (MTD KIOSK), S = FEEDER (MTD SHELTER).

NUMBER OF CONDUCTORS OF THIS SIZE IN CONDUIT. * INDICATES INCLUDES GROUND

CONDUCTOR SIZE FOR COPPER CONDUCTORS IN AWG

FIBER — SINGLE MODE/MULTI-MODE FIBER OPTIC CABLE (SEE SPECIAL PROVISIONS)

JUNCTION BOX DESIGNATION SCHEME

LIGHTING CONTROLLER — JUNCTION BOX NUMBER

29JB1
15+50.00
30.00' LT. — LOCATION

MTD JUNCTION BOXES:
29JB (MTD-C/P1)
P = POWER
C = COMMUNICATIONS

ROADWAY LIGHTING LEGEND

EXISTING	PROPOSED	DESCRIPTION
	L# H	ROADWAY LED LUMINAIRE ("L#" INDICATES LUMINAIRE TYPE, SEE SPECIAL PROVISIONS FOR DESCRIPTION OF LUMINAIRE TYPE). LUMINAIRE MOUNTED ON 10' DAVIT ARM MOUNTED ON 30' ALUMINUM LIGHT POLE MOUNTED FOUNDATION ("H" INDICATES HELIX FOUNDATION, "C" INDICATES CONCRETE FOUNDATION).
		PEDESTRIAN LED LUMINAIRE. LUMINAIRE MOUNTED ON A DIRECTLY IMBEDDED 13' PRE-STRESSED CONCRETE LIGHT POLE. LUMINAIRE SHALL BE CONNECTED TO U OF I FACILITIES AND WILL BE MAINTAINED BY THE U OF I.
		TWO (2) ROADWAY LED LUMINAIRES ("L#" INDICATES LUMINAIRE TYPE, SEE SPECIAL PROVISIONS FOR DESCRIPTION OF LUMINAIRE TYPE). LUMINAIRES MOUNTED ON TWIN 10' DAVIT ARMS MOUNTED ON 30' ALUMINUM LIGHT POLE MOUNTED ON CONCRETE TYPE FOUNDATION.
		ROADWAY LED LUMINAIRE (SEE SPECIAL PROVISIONS FOR DESCRIPTION OF LUMINAIRE TYPE). LUMINAIRE MOUNTED ON 15' ALUMINUM TRUSS ARM MOUNTED ON 35' TRAFFIC SIGNAL MAST ARM POLE. TRUSS ARM, POLE AND FOUNDATION TO BE PROVIDED AND INSTALLED AS PART OF THE TRAFFIC SIGNAL INSTALLATION. COORDINATE LUMINAIRE INSTALLATION WITH POLE AND SIGNAL INSTALLATION.
		ROADWAY LIGHTING UNIT WITH LUMINAIRE AND POLE
		PORTLAND CEMENT CONCRETE HANDHOLE
		PROPOSED LIGHTING CONTROLLER (# AS NOTED)
		COMPOSITE TYPE JUNCTION BOX, SPECIAL (12"W x 12"L x 12"D)
		GULFBOX JUNCTION, COMPOSITE CONCRETE (13"W x 24"L x 12"D)
		2" PVC CONDUIT (SCHEDULE 80), AUGURED
		2" PVC CONDUIT (SCHEDULE 40), TRENCHED
UGE		UNDERGROUND CONDUIT
OHE		OVERHEAD ELECTRICAL CONDUCTORS
RWL		ROADWAY LIGHTING CONDUIT/CONDUCTORS

KEYED NOTES (THIS SHEET)

- (A) EXISTING LIGHTING UNIT (POLE AND LUMINAIRE) TO BE REMOVED COMPLETE.
- (B) EXISTING CONCRETE FOUNDATION TO BE REMOVED COMPLETE.
- (C) EXISTING HANDHOLE TO BE REMOVED COMPLETE.
- (D) EXISTING CONDUIT AND CONDUCTORS TO BE CUT OFF BELOW GRADE AND ABANDONED IN PLACE.
- (E) REMOVE EXISTING CONDUCTORS BACK TO NEAREST JUNCTION BOX OR LIGHTING UNIT TO REMAIN. CUT OFF CONDUIT BELOW GRADE AND ABANDON IN PLACE.
- (F) UNIVERSITY OF ILLINOIS EXISTING LIGHTING EQUIPMENT AND SYSTEM TO REMAIN AS PRESENTLY INSTALLED.
- (G) EXISTING LIGHTING UNIT (POLE AND LUMINAIRE) TO REMAIN.
- (H) EXISTING CONDUIT AND CONDUCTORS TO REMAIN.
- (Q) EXISTING JUNCTION BOX TO BE ADJUSTED AND REMAIN IN SERVICE.
- (S) RELOCATE EXISTING LIGHTING UNIT. PROVIDE NEW CONCRETE FOUNDATION TO MATCH EXISTING CONCRETE FOUNDATION. EXTEND ROADWAY LIGHTING CIRCUIT (CONDUIT AND WIRING) TO NEW LOCATION TO MAINTAIN SERVICE TO RELOCATED LIGHTING UNIT. NEW LOCATION TO BE VERIFIED BY ENGINEER IN THE FIELD.

(I) (J) (K) (L) (M) (N) (O) (P) (R) (T) NOT USED

Clark Dietz ENGINEERS

FILE NAME = P:\C0010720_MCORE\Plans\sheets\Project1\P1-sht-lighting.dgn

PLOT DATE = 8/25/2016 2:12:10 PM

DESIGNED - M.L.S.	REVISED - M.L.S.	STATE OF ILLINOIS DEPARTMENT OF TRANSPORTATION	ROADWAY LIGHTING PLANS - GREEN STREET
DRAWN - L.F.D.	REVISED - R.J.H.		
CHECKED - L.M.Z.	REVISED - S.M.W.		
DATE - MARCH 2016	REVISED - AUGUST 2016		SCALE: 1"=20' | SHEET NO. 121 OF 236 SHEETS | STA. 1023+50 TO STA. 1029+50

F.A.U. RTE.	SECTION	COUNTY	TOTAL SHEETS	SHEET NO.
	15-00304-01-PV	CHAMPAIGN	236	121
	MCORE PROJECT 1	CONTRACT NO. 91539		
JOB NO. C-95-305-16	ILLINOIS	FED. AID PROJECT TIG-51B1(057)		

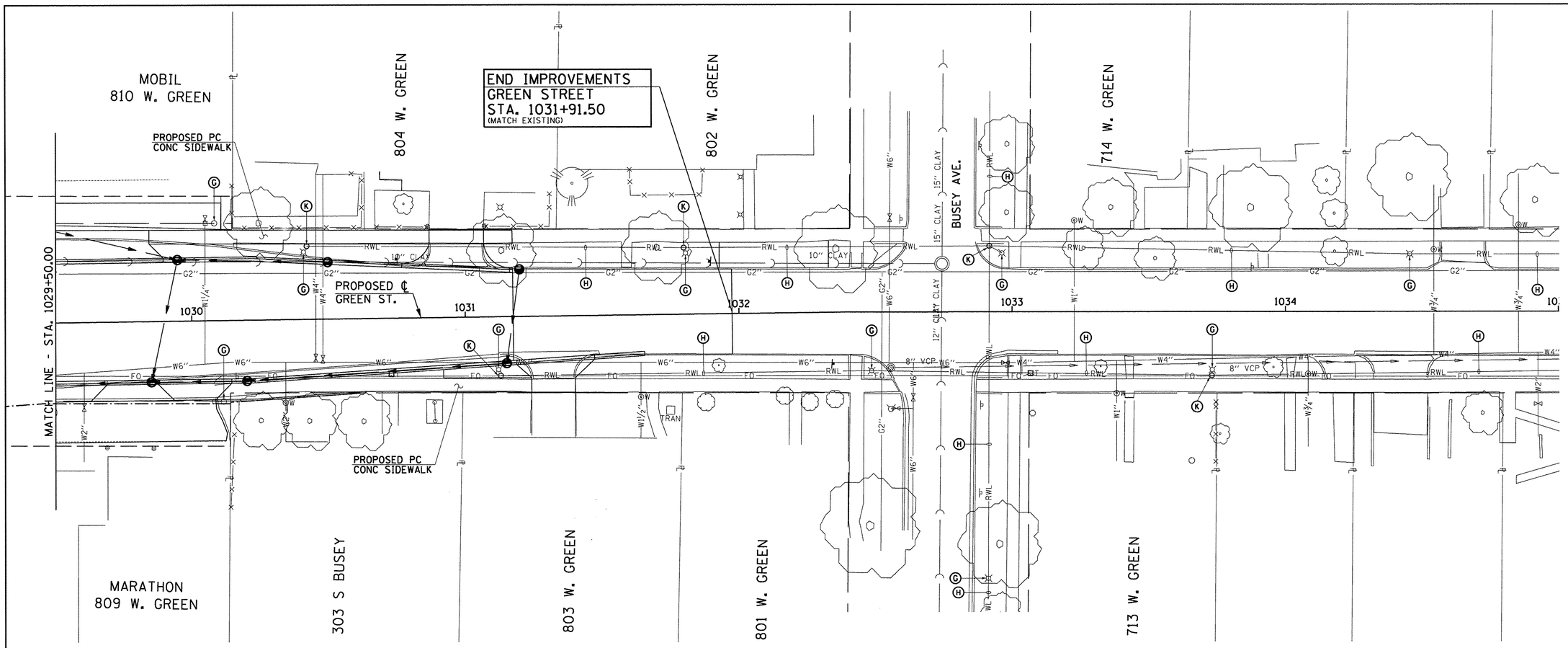

CIRCUIT DESIGNATION SCHEME

LIGHTING CONTROLLER — CIRCUIT — POLE NUMBER

29A3
1003+57.00 — POLE LOCATION
80.17' LT.

NOTE;
THE CONTRACTOR SHALL PROVIDE A PERMANENT STICKER INSIDE HAND HOLE OF EACH LIGHT POLE INDICATING THE LIGHTING CONTROLLER, CIRCUIT AND POLE NUMBER.

CONDUCTOR SYMBOL SCHEME

L
3*
6

CIRCUIT TYPE: L = CITY OF URBANA LIGHTING,
K = FEEDER (MTD KIOSK),
S = FEEDER (MTD SHELTER).

NUMBER OF CONDUCTORS OF THIS SIZE IN CONDUIT.
* INDICATES INCLUDES GROUND

CONDUCTOR SIZE FOR COPPER CONDUCTORS IN AWG

FIBER — SINGLE MODE/MULTI-MODE FIBER OPTIC CABLE (SEE SPECIAL PROVISIONS)

JUNCTION BOX DESIGNATION SCHEME

LIGHTING CONTROLLER — JUNCTION BOX NUMBER

29JB1
15+50.00 — LOCATION
30.00' LT.

MTD JUNCTION BOXES:
29JB (MTD-C/P1)
P = POWER
C = COMMUNICATIONS

ROADWAY LIGHTING LEGEND

EXISTING	PROPOSED	DESCRIPTION
	L* H	ROADWAY LED LUMINAIRE ("L*" INDICATES LUMINAIRE TYPE, SEE SPECIAL PROVISIONS FOR DESCRIPTION OF LUMINAIRE TYPE). LUMINAIRE MOUNTED ON 10' DAVIT ARM MOUNTED ON 30' ALUMINUM LIGHT POLE MOUNTED FOUNDATION ("H" INDICATES HELIX FOUNDATION, "C" INDICATES CONCRETE FOUNDATION).
		PEDESTRIAN LED LUMINAIRE. LUMINAIRE MOUNTED ON A DIRECTLY IMBEDDED 13' PRE-STRESSED CONCRETE LIGHT POLE. LUMINAIRE SHALL BE CONNECTED TO U OF I FACILITIES AND WILL BE MAINTAINED BY THE U OF I.
		TWO (2) ROADWAY LED LUMINAIRES ("L*" INDICATES LUMINAIRE TYPE, SEE SPECIAL PROVISIONS FOR DESCRIPTION OF LUMINAIRE TYPE). LUMINAIRES MOUNTED ON TWIN 10' DAVIT ARMS MOUNTED ON 30' ALUMINUM LIGHT POLE MOUNTED ON CONCRETE TYPE FOUNDATION.
		ROADWAY LED LUMINAIRE (SEE SPECIAL PROVISIONS FOR DESCRIPTION OF LUMINAIRE TYPE). LUMINAIRE MOUNTED ON 15' ALUMINUM TRUSS ARM MOUNTED ON 35' TRAFFIC SIGNAL MAST ARM POLE. TRUSS ARM, POLE AND FOUNDATION TO BE PROVIDED AND INSTALLED AS PART OF THE TRAFFIC SIGNAL INSTALLATION. COORDINATE LUMINAIRE INSTALLATION WITH POLE AND SIGNAL INSTALLATION.
		ROADWAY LIGHTING UNIT WITH LUMINAIRE AND POLE
		PORTLAND CEMENT CONCRETE HANDHOLE
		PROPOSED LIGHTING CONTROLLER (* AS NOTED)
		COMPOSITE TYPE JUNCTION BOX, SPECIAL (12"W x 12"L x 12"D)
		GULFBOX JUNCTION, COMPOSITE CONCRETE (13"W x 24"L x 12"D)
		2" PVC CONDUIT (SCHEDULE 80), AUGURED
		2" PVC CONDUIT (SCHEDULE 40), TRENCHED
UGE		UNDERGROUND CONDUIT
OHE		OVERHEAD ELECTRICAL CONDUCTORS
RWL		ROADWAY LIGHTING CONDUIT/CONDUCTORS

KEYED NOTES (THIS SHEET)

(G) EXISTING LIGHTING UNIT (POLE AND LUMINAIRE) TO REMAIN.
(H) EXISTING CONDUIT AND CONDUCTORS TO REMAIN.
(K) EXISTING HANDHOLE TO REMAIN.

(A) (B) (C) (D) (E) (F) (I) (J) (L) (M) (N) (O) (P) (R) (S) (T) NOT USED

FILE NAME = P:\C0010720_MCORE\Plans\sheets\Project1\P1-sht-lighting.dgn
PLOT DATE = 8/25/2016 1:39:23 PM

DESIGNED	M.L.S.	REVISED	-
DRAWN	L.F.D.	REVISED	-
CHECKED	L.M.Z.	REVISED	-
DATE	MARCH 2016	REVISED	-

STATE OF ILLINOIS
DEPARTMENT OF TRANSPORTATION

ROADWAY LIGHTING PLANS - GREEN STREET

SCALE: 1"=20' | SHEET NO. 122 OF 236 SHEETS | STA. 1029+50 | TO STA. 1035+00

F.A.U. RTE.	SECTION	COUNTY	TOTAL SHEETS	SHEET NO.
	15-00304-01-PV	CHAMPAIGN	236	122
	MCORE PROJECT 1	CONTRACT NO. 91539		
JOB NO. C-95-305-16	ILLINOIS	FED. AID PROJECT TIG-5181(057)		

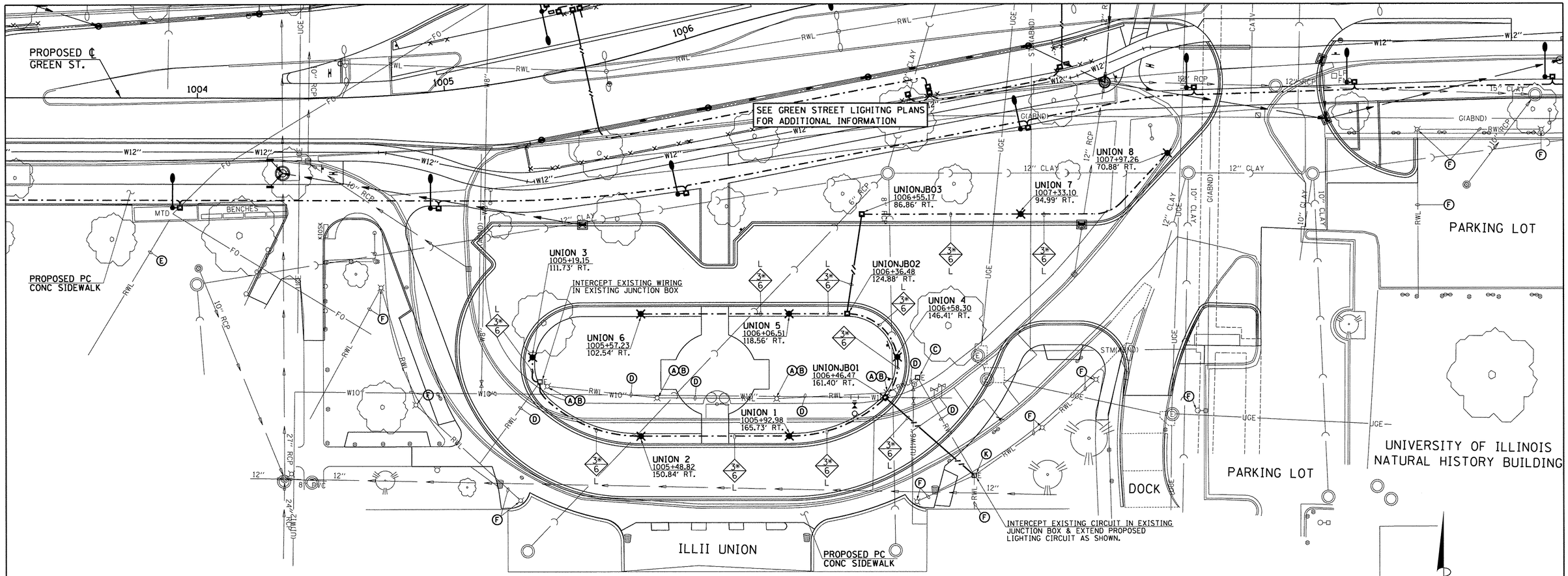

CIRCUIT DESIGNATION SCHEME

LIGHTING CONTROLLER — CIRCUIT — POLE NUMBER

29A3
1003+57.00
80.17' LT. — POLE LOCATION

NOTE:
THE CONTRACTOR SHALL PROVIDE A PERMANENT STICKER INSIDE HAND HOLE OF EACH LIGHT POLE INDICATING THE LIGHTING CONTROLLER, CIRCUIT AND POLE NUMBER.

CONDUCTOR SYMBOL SCHEME

L — CIRCUIT TYPE: L = CITY OF URBANA LIGHTING, K = FEEDER (MTD KIOSK), S = FEEDER (MTD SHELTER).

3* / 6 — NUMBER OF CONDUCTORS OF THIS SIZE IN CONDUIT. * INDICATES INCLUDES GROUND

CONDUCTOR SIZE FOR COPPER CONDUCTORS IN AWG

FIBER — SINGLE MODE/MULTI-MODE FIBER OPTIC CABLE (SEE SPECIAL PROVISIONS)

JUNCTION BOX DESIGNATION SCHEME

LIGHTING CONTROLLER — JUNCTION BOX NUMBER

29JB1
15+50.00
30.00' LT. — LOCATION

MTD JUNCTION BOXES:
29JB (MTD-C/P1)
P = POWER
C = COMMUNICATIONS

ROADWAY LIGHTING LEGEND

EXISTING	PROPOSED	DESCRIPTION
	L* H	ROADWAY LED LUMINAIRE ("L*" INDICATES LUMINAIRE TYPE, SEE SPECIAL PROVISIONS FOR DESCRIPTION OF LUMINAIRE TYPE). LUMINAIRE MOUNTED ON 10' DAVIT ARM MOUNTED ON 30' ALUMINUM LIGHT POLE MOUNTED FOUNDATION ("H" INDICATES HELIX FOUNDATION, "C" INDICATES CONCRETE FOUNDATION).
		PEDESTRIAN LED LUMINAIRE. LUMINAIRE MOUNTED ON A DIRECTLY IMBEDDED 13' PRE-STRESSED CONCRETE LIGHT POLE. LUMINAIRE SHALL BE CONNECTED TO U OF I FACILITIES AND WILL BE MAINTAINED BY THE U OF I.
		TWO (2) ROADWAY LED LUMINAIRES ("L*" INDICATES LUMINAIRE TYPE, SEE SPECIAL PROVISIONS FOR DESCRIPTION OF LUMINAIRE TYPE), LUMINAIRES MOUNTED ON TWIN 10' DAVIT ARMS MOUNTED ON 30' ALUMINUM LIGHT POLE MOUNTED ON CONCRETE TYPE FOUNDATION.
		ROADWAY LED LUMINAIRE (SEE SPECIAL PROVISIONS FOR DESCRIPTION OF LUMINAIRE TYPE). LUMINAIRE MOUNTED ON 15' ALUMINUM TRUSS ARM MOUNTED ON 35' TRAFFIC SIGNAL MAST ARM POLE. TRUSS ARM, POLE AND FOUNDATION TO BE PROVIDED AND INSTALLED AS PART OF THE TRAFFIC SIGNAL INSTALLATION. COORDINATE LUMINAIRE INSTALLATION WITH POLE AND SIGNAL INSTALLATION.
		ROADWAY LIGHTING UNIT WITH LUMINAIRE AND POLE
		PORTLAND CEMENT CONCRETE HANDHOLE
		PROPOSED LIGHTING CONTROLLER (* AS NOTED)
		COMPOSITE TYPE JUNCTION BOX, SPECIAL (12"W x 12"L x 12"D)
		GULFBOX JUNCTION, COMPOSITE CONCRETE (13"W x 24"L x 12"D)
		2" PVC CONDUIT (SCHEDULE 80), AUGURED
		2" PVC CONDUIT (SCHEDULE 40), TRENCHED
UGE		UNDERGROUND CONDUIT
OHE		OVERHEAD ELECTRICAL CONDUCTORS
RWL		ROADWAY LIGHTING CONDUIT/CONDUCTORS

KEYED NOTES (THIS SHEET)

- (A) EXISTING LIGHTING UNIT (POLE AND LUMINAIRE) TO BE REMOVED COMPLETE.
- (B) EXISTING CONCRETE FOUNDATION TO BE REMOVED COMPLETE.
- (C) EXISTING JUNCTION BOX TO BE REMOVED COMPLETE.
- (D) EXISTING CONDUIT AND CONDUCTORS TO BE CUT OFF BELOW GRADE AND ABANDONED IN PLACE.
- (E) REMOVE EXISTING CONDUCTORS BACK TO NEAREST JUNCTION BOX OR LIGHTING UNIT TO REMAIN. CUT OFF CONDUIT BELOW GRADE AND ABANDON IN PLACE.
- (F) UNIVERSITY OF ILLINOIS EXISTING LIGHTING EQUIPMENT AND SYSTEM TO REMAIN AS PRESENTLY INSTALLED.
- (I) INTERCEPT EXISTING CONDUIT AND EXTEND TO NEW JUNCTION BOX.
- (K) EXISTING HANDHOLE TO REMAIN.

(G) (H) (J) (L) (M) (N) (O) (P) (R) (S) (T) NOT USED

Clark Dietz ENGINEERS

FILE NAME = P:\C0010720_MCORE\Plans\sheets\Project1\P1-sht-lighting.dgn	DESIGNED - M.L.S.	REVISED -	STATE OF ILLINOIS DEPARTMENT OF TRANSPORTATION
PLOT DATE = 8/25/2016 1:39:23 PM	DRAWN - L.F.D.	REVISED -	
	CHECKED - L.M.Z.	REVISED -	
	DATE - MARCH 2016	REVISED -	

LIGHTING PLANS - ILLINI UNION

SCALE: 1"=20' | SHEET NO. 123 OF 236 SHEETS | STA. 1004+00 TO STA. 1009+50

F.A.U. RTE.	SECTION	COUNTY	TOTAL SHEETS	SHEET NO.
	15-00304-01-PV	CHAMPAIGN	236	123
	MCORE PROJECT 1	CONTRACT NO. 91539		
JOB NO. C-95-305-16	ILLINOIS	FED. AID PROJECT TIG-518(057)		

LIGHTING CONTROLLER #29 CITY PANELBOARD SCHEDULE

PANELBOARD CITY LIGHTING — MAIN 200 AMP CIRCUIT BREAKER — LOCATION: GREEN ST. STA. 1012+50.00, 66.00' LT.
VOLTAGE 120/208 — BUS RATING 200 AMPS
PHASE/WIRE 3PH/4W — MOUNTING INTERIOR ONLY

DESCRIPTION	CKT. NO.	LOAD (VA) A	B	C	AMPS/ POLES	CKT. BKR.	CKT. BKR.	AMPS/ POLES	LOAD (VA) A	B	C	CKT. NO.	DESCRIPTION
SURGE ARRESTER	1	0			30/3			30/2	1852			2	STREET LIGHTING CIRCUIT A
	3		0							1852		4	
	5			0				30/2			1474	6	STREET LIGHTING CIRCUIT B
CONTROLLER LIGHT & GFI	7	250			20/1				1474			8	
CONTROLLER CIRCUIT	9		250		20/1			30/2		1153		10	STREET LIGHTING CIRCUIT C
SPACE	11			0							1153	12	
SPACE	13	0						30/2	1168			14	STREET LIGHTING CIRCUIT D
SPACE	15		0							1168		16	
SPACE	17			0							0	18	SPACE
SUBTOTAL "A"		250							4494				
SUBTOTAL "B"			250							4173			
SUBTOTAL "C"				0							2627		
TOTAL VOLT-AMPERES A,B & C: 11,794													

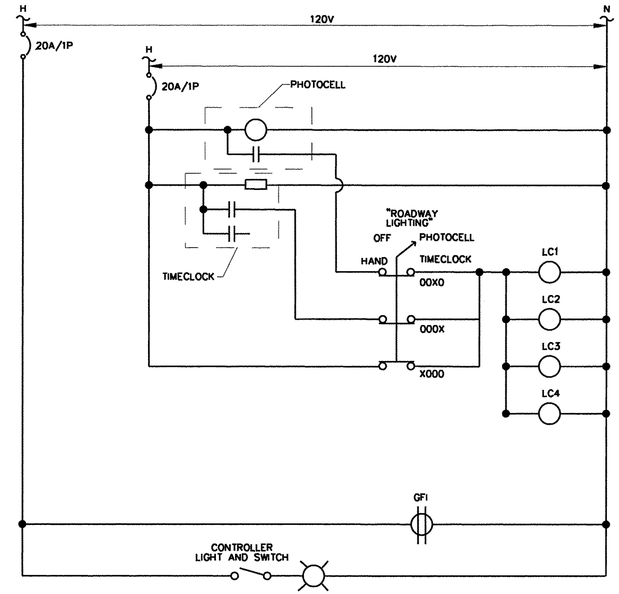

NOTE:
GROUND WIRE NOT SHOWN FOR CLARITY. CONTRACTOR SHALL GROUND ALL EQUIPMENT IN THE LIGHTING CONTROL CABINET AS REQUIRED BY THE 2014 NATIONAL ELECTRICAL CODE.

LIGHTING CONTROLLER #29 CONTROL DIAGRAM
NO SCALE

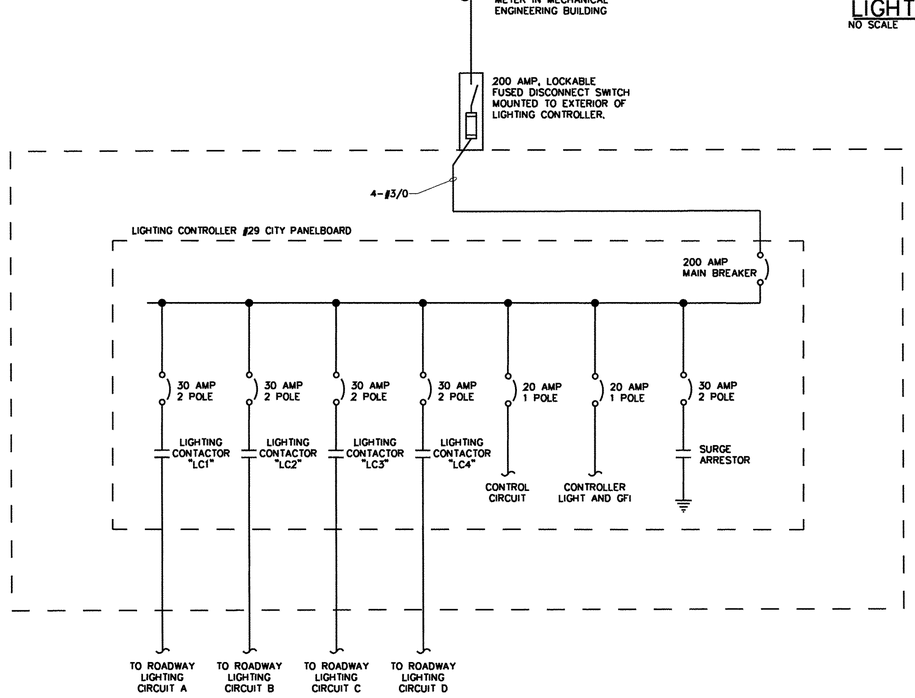

LIGHTING CONTROLLER #29 ELECTRICAL ONE-LINE DIAGRAM
NO SCALE

Clark Dietz ENGINEERS

FILE NAME = P:\C0010720_MCORE\Plans\sheets\Project1\P1-sht-lighting.dgn
PLOT DATE = 8/25/2016 1:39:23 PM

DESIGNED - M.L.S.	REVISED -	
DRAWN - L.F.D.	REVISED -	
CHECKED - L.M.Z.	REVISED -	
DATE - MARCH 2016	REVISED -	

STATE OF ILLINOIS
DEPARTMENT OF TRANSPORTATION

ROADWAY LIGHTING PLANS - GREEN STREET

SCALE: 1"=20' | SHEET NO. 124 OF 236 SHEETS | STA. 1004+00 TO STA. 1009+50

F.A.U. RTE.	SECTION	COUNTY	TOTAL SHEETS	SHEET NO.
	15-00304-01-PV	CHAMPAIGN	236	124
	MCORE PROJECT 1	CONTRACT NO. 91539		
JOB NO. C-95-305-16	ILLINOIS	FED. AID PROJECT TIG-5181(057)		

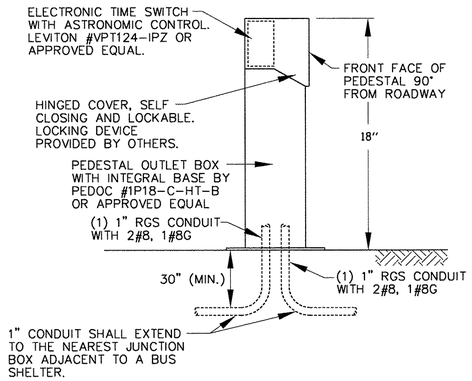

NOTES

1. THE PEDESTAL OUTLET BOX WITH BASE PLATE SHALL BE ANCHORED TO PC CONCRETE SIDEWALK PER THE MANUFACTURERS RECOMMENDATIONS AND TO THE SATISFACTION OF THE ENGINEER.
2. THE 1" CONDUITS SHALL EXTEND TO THE NEAREST JUNCTION BOX ADJACENT TO A BUS SHELTER.
3. THE LOCATION OF THE PEDESTAL IS CONSIDERED APPROXIMATE. ACTUAL LOCATION WILL BE DETERMINED IN FIELD.
4. THE ELECTRONIC TIME SWITCH PEDESTAL AND ASSOCIATED WORK INCLUDING THE CONDUIT AND CABLE AS SHOWN SHALL BE CONSIDERED INCLUDED IN THE CONTRACT UNIT PRICE EACH FOR ELECTRIC SERVICE INSTALLATION, SPECIAL. NO ADDITIONAL COMPENSATION WILL BE ALLOWED.

ELECTRONIC TIME SWITCH PEDESTAL DETAIL

NO SCALE

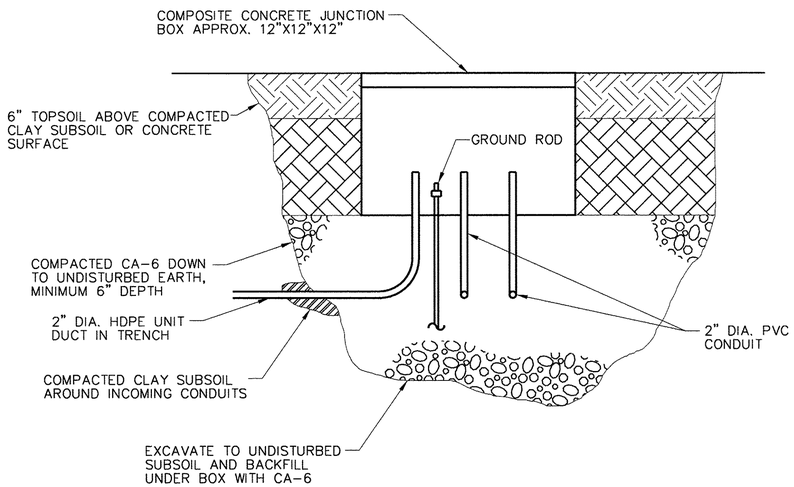

JUNCTION BOX INSTALLATION DETAIL

NO SCALE

LIGHTING CONTROLLER #29 BILL OF MATERIALS		
QTY	ITEM	DESCRIPTION
1	1	200A, 120/208V, 3ø, 42 CIRCUIT PANELBOARD (INTERIOR ONLY, NO PANEL TUB), QUANTITIES OF BREAKERS AS SHOWN IN PANELBOARD SCHEDULES.
1	2	HAND-OFF-PHOTO-TIMER SELECTOR SWITCH WITH LEGEND PLATE.
1	3	120 VAC, 20A, 1P PLUNGERTYPE SWITCH FOR CONTROLLER LIGHT, DOOR ACTIVATED.
1	4	INCANDESCENT LIGHT FIXTURE WITH CLEAR GLOBE AND PROTECTIVE GUARD. PROVIDE 60WATT, 130VAC LAMP.
	5	ITEM NOT USED
1	6	DUPLEX RECEPTACLE, 120VAC, 20A, GFCI TYPE.
1	7	TERMINAL STRIPS. QUANTITY AS REQUIRED FOR INCOMING WIRING PLUS 100% SPARE TERMINALS. PROVIDE SEPARATE TERMINAL STRIPS FOR POWER, NEUTRAL AND GROUND WIRING AS REQUIRED.
4	8	LIGHTING CONTACTOR (LC1, LC2, LC3, LC4), 30A, 240VAC, 4 POLE, 120VAC ELECTRICALLY HELD COIL. PROVIDE SPACE FOR ADDITIONALCONTACTORS.
1	9	SURGE ARRESTOR.
1	10	CONTROL WIRING TERMINAL BLOCK.
1	11	ASTRONOMICAL TIME CLOCK WITH BATTERY MEMORY BACKUP. ONE CIRCUIT TO CONTROL LIGHTING CONTACTORS.

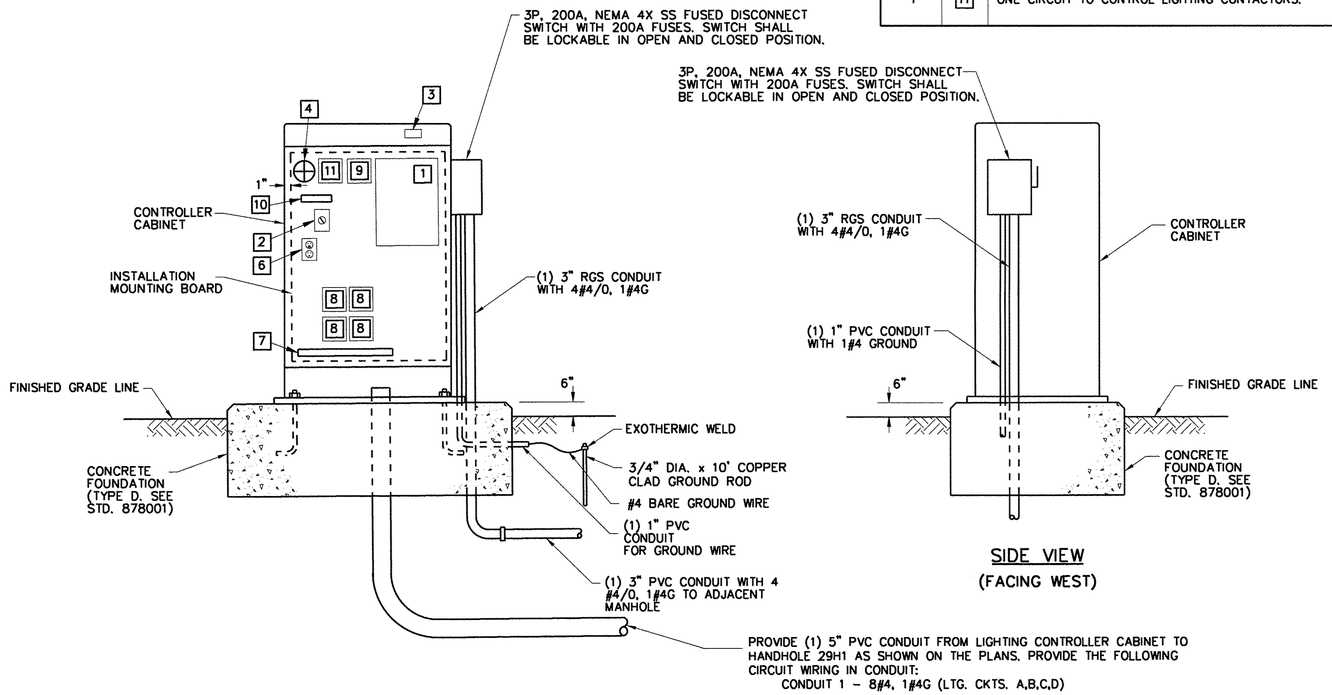

FRONT VIEW
(FACING NORTH)

SIDE VIEW
(FACING WEST)

CONTROL CABINET, FOUNDATION, AND DIAGRAMMATIC ASSEMBLY DETAIL LIGHTING CONTROLLER #29

NO SCALE

Clark Dietz ENGINEERS

FILE NAME = P:\C0010720_MCORE\Plans\sheets\Project1\P1-sht-lighting.dgn

PLOT DATE = 8/25/2016 1:39:24 PM

DESIGNED - M.L.S.	REVISED - M.L.S.	
DRAWN - L.F.D.	REVISED - R.J.H.	
CHECKED - L.M.Z.	REVISED - S.M.W.	
DATE - MARCH 2016	REVISED - AUGUST 2016	

STATE OF ILLINOIS
DEPARTMENT OF TRANSPORTATION

ROADWAY LIGHTING PLANS - GREEN STREET

SCALE: 1"=20' | SHEET NO. 125 OF 236 SHEETS | STA. 1004+00 TO STA. 1009+50

F.A.U. RTE.	SECTION	COUNTY	TOTAL SHEETS	SHEET NO.
	15-00304-01-PV	CHAMPAIGN	236	125
	MCORE PROJECT 1	CONTRACT NO. 91539		
JOB NO. C-95-305-16	ILLINOIS	FED. AID PROJECT TIG-5181(057)		

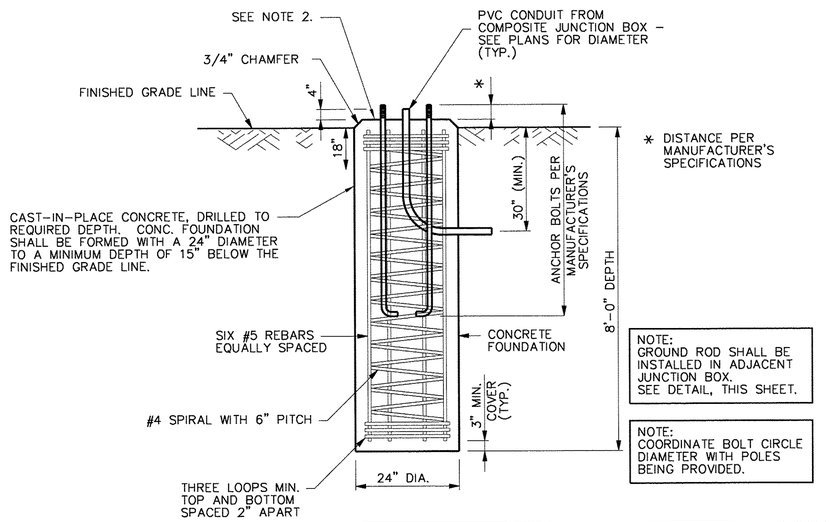

NOTES

1. THE CONTRACTOR SHALL USE CARE IN CONSTRUCTING THE CONCRETE FOUNDATIONS FOR THE LIGHT POLES THAT ARE NEAR TRENCH EXCAVATIONS FOR BOX CULVERTS OR STORM SEWERS. THE TRENCH BACKFILL MATERIAL OR CONTROLLED LOW-STRENGTH MATERIAL SHALL BE BLOCKED OUT AT THE CONCRETE FOUNDATION LOCATIONS TO ALLOW FOR THEIR LATER CONSTRUCTION AS DIRECTED BY THE ENGINEER.
2. THE TOP OF CONCRETE FOUNDATION SHALL BE 4" ABOVE GRADE IN TURF AREAS OR 1" ABOVE GRADE IN PAVED AREAS.

LIGHT POLE CONCRETE FOUNDATION DETAIL

NO SCALE

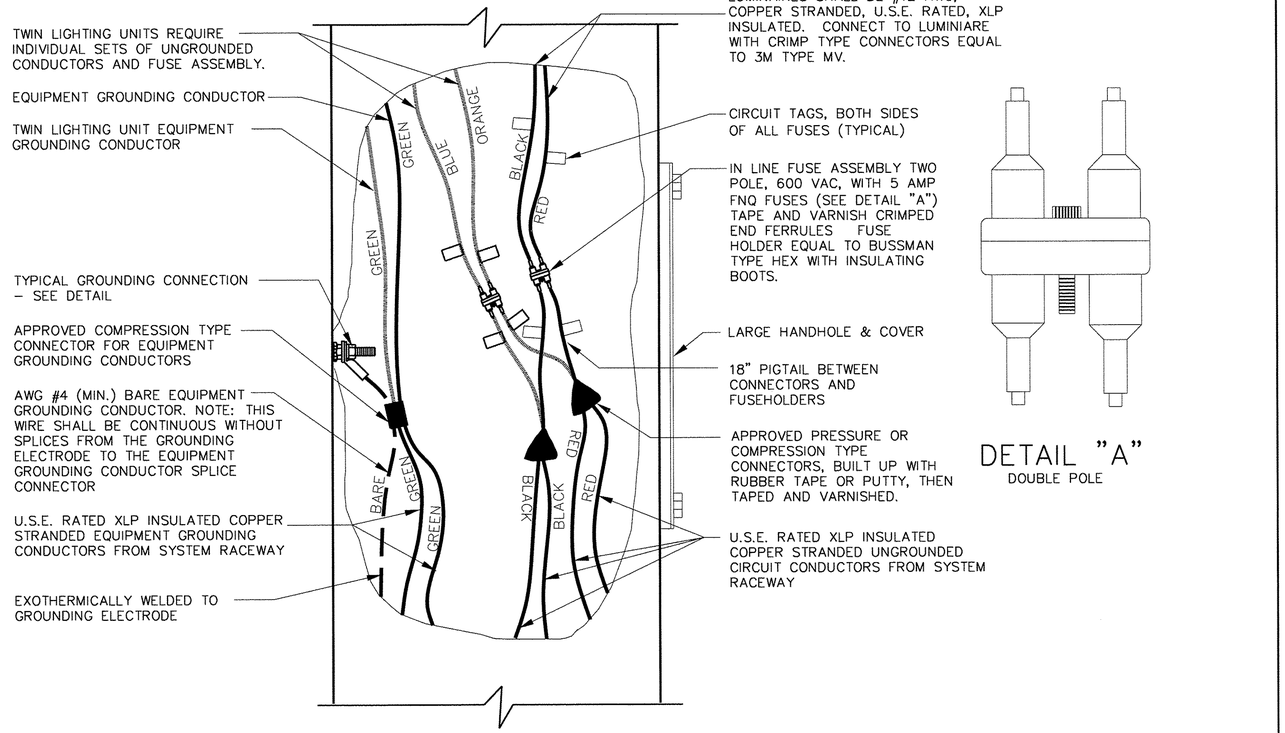

DETAIL "A"
DOUBLE POLE

2 WIRE – 240 VAC (UNGROUNDED CONDUCTORS) WITH EQUIPMENT GROUNDING CONDUCTOR

NO SCALE

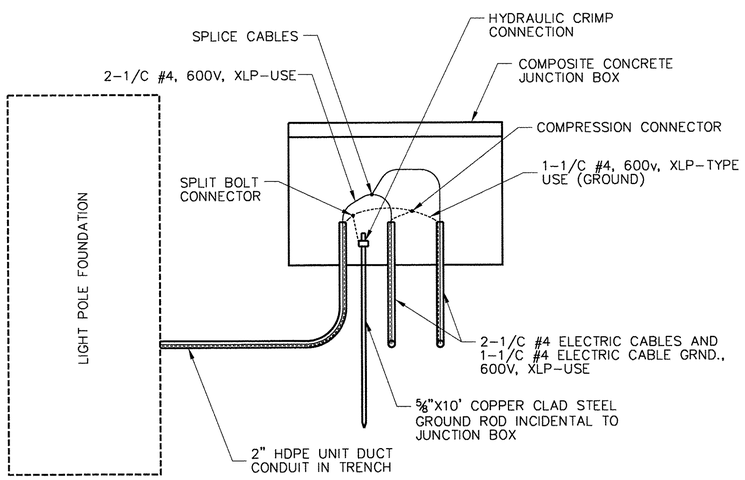

GROUNDING ROD INSTALLATION DETAIL

NO SCALE

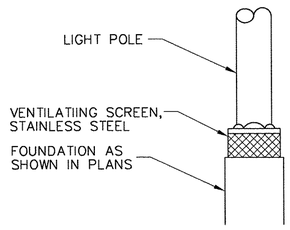

POLE FOUNDATION DETAIL

NO SCALE

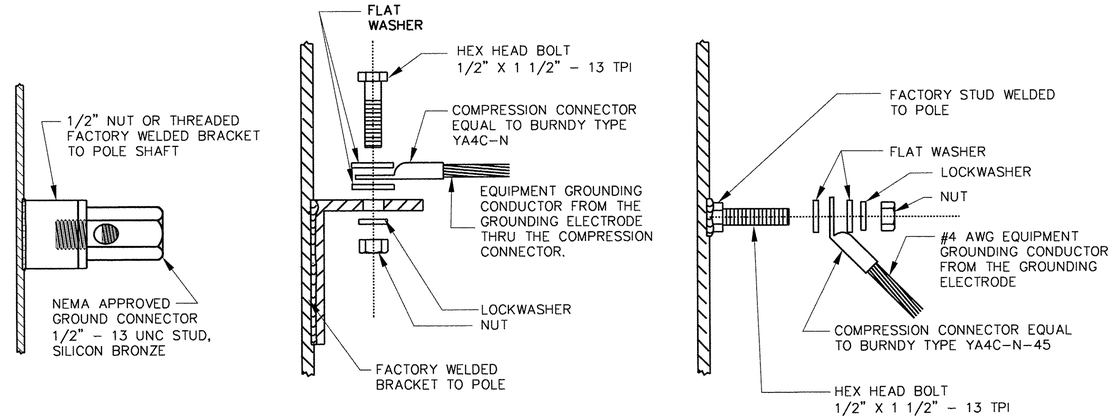

NOTE: NUT, BOLT, AND WASHERS SHALL BE STAINLESS STEEL

TYPICAL GROUNDING CONNECTIONS

NO SCALE

FILE NAME = P:\C0010720_MCORE\Plans\sheets\Project1\P1-sht-lighting.dgn	DESIGNED - M.L.S.	REVISED - M.L.S.	STATE OF ILLINOIS DEPARTMENT OF TRANSPORTATION	ROADWAY LIGHTING PLANS - GREEN STREET	
PLOT DATE = 8/25/2016 1:39:24 PM	DRAWN - L.F.D.	REVISED - R.J.H.		SCALE: 1"=20'	SHEET NO. 126 OF 236 SHEETS
	CHECKED - L.M.Z.	REVISED - S.M.W.		STA. 1004+00	TO STA. 1009+50
	DATE - MARCH 2016	REVISED - AUGUST 2016			

F.A.U. RTE.	SECTION	COUNTY	TOTAL SHEETS	SHEET NO.
	15-00304-01-PV	CHAMPAIGN	236	126
	MCORE PROJECT 1	CONTRACT NO. 91539		
	JOB NO. C-95-305-16 ILLINOIS	FED. AID PROJECT TIG-5181(057)		